Miscelatore monocomando bidet CHRONOS_CR001560

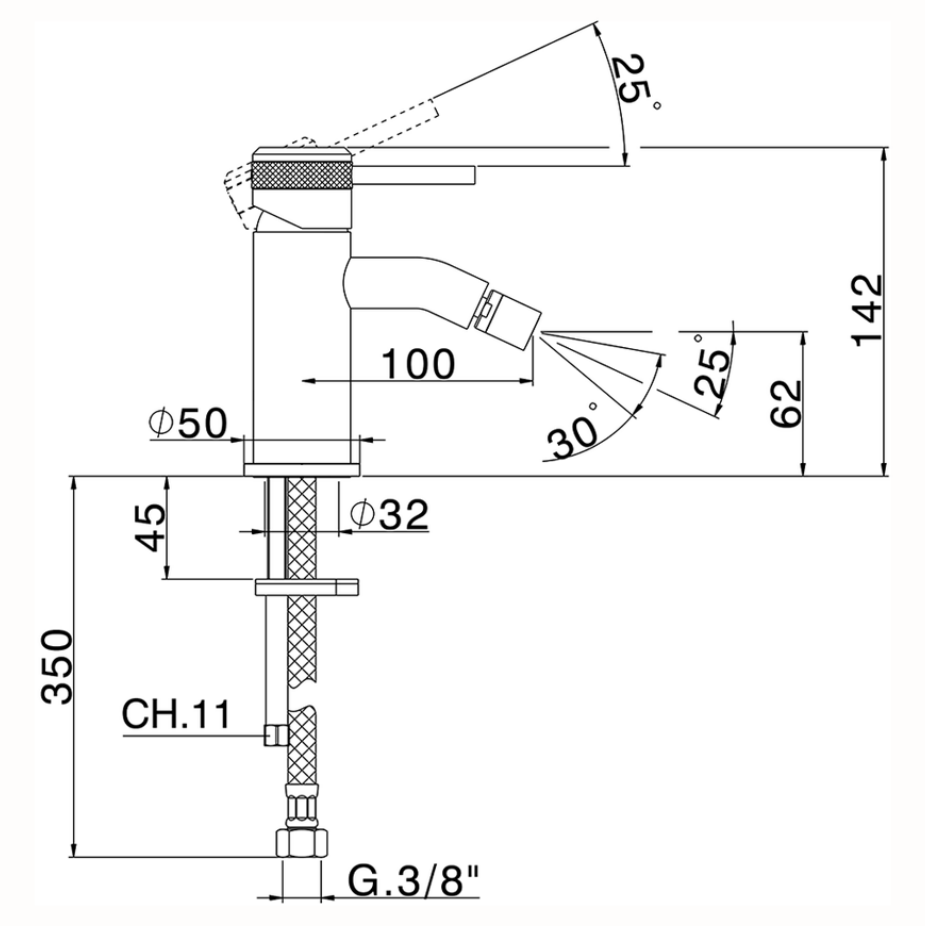

CR001560 http://www.huberitalia.com/miscelatore-monocomando-bidet-chronos-cr001560

2026-04-17