Parte esterna monocomando doccia incasso M32_MT003000

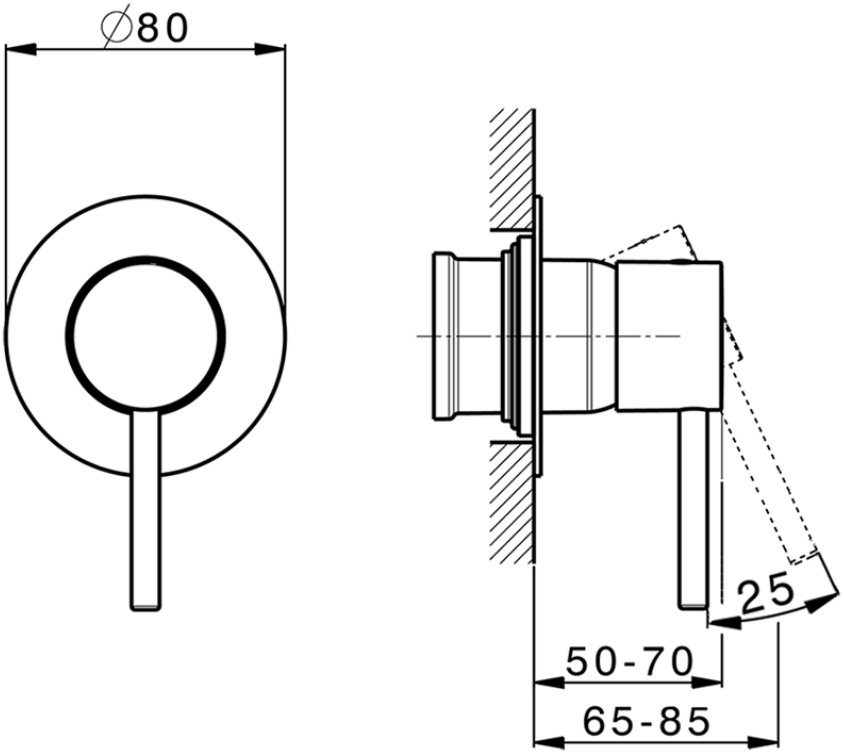

MT003000 http://www.huberitalia.com/parte-esterna-monocomando-doccia-incasso-m32-mt003000

© 2021 Huber. Via Brughiere, 50. 28017 - San Maurizio (NO) - Italy
Mail: huber@hubertitalia.com, Telefono: (+39) 0322 967783, P.Iva IT02422800033.

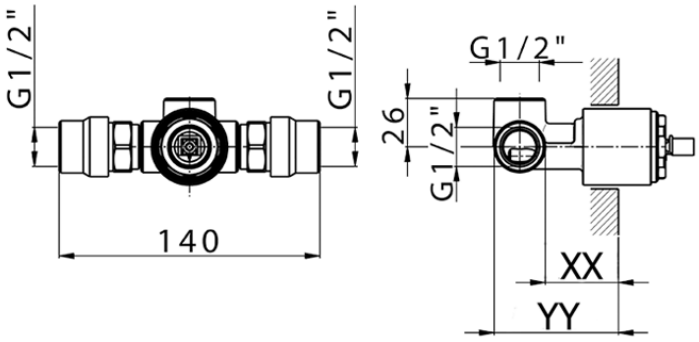

Piastra/Plate/Plaque/Platte/Placa
2-3mm: XX 27-47 YY 54-74
10mm: XX 16-40 YY 43-68

ZB005301 http://www.huberitalia.com/parte-incasso-monocomando-doccia-incasso-zb005301

© 2021 Huber. Via Brughiere, 50. 28017 - San Maurizio (NO) - Italy
Mail: huber@hubertitalia.com, Telefono: (+39) 0322 967783, P.Iva IT02422800033.

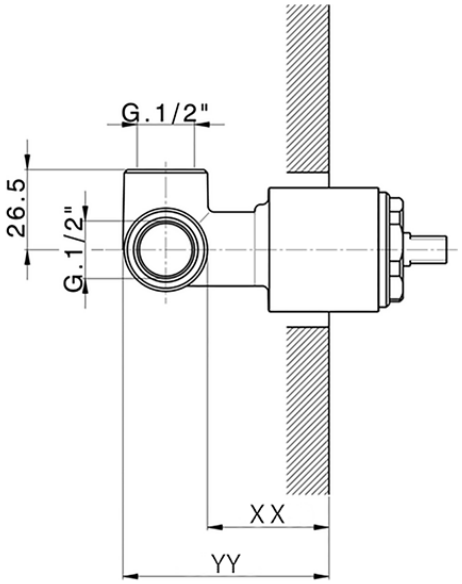

Piastra/Plate/Plaque/Platte/Placa
2-3mm: XX 27-47 YY 54-74
10mm: XX 16-40 YY 43-68

ZB005300 http://www.huberitalia.com/parte-incasso-monocomando-doccia-incasso-zb005300

2026-11-24

© 2021 Huber. Via Brughiere, 50. 28017 - San Maurizio (NO) - Italy
Mail: huber@hubertitalia.com, Telefono: (+39) 0322 967783, P.Iva IT02422800033.