Huber
TEL. (+39) 0322 967783
MAIL. huber@huberitalia.com

Miscelatore termostatico doccia LEVITY_LYT01010

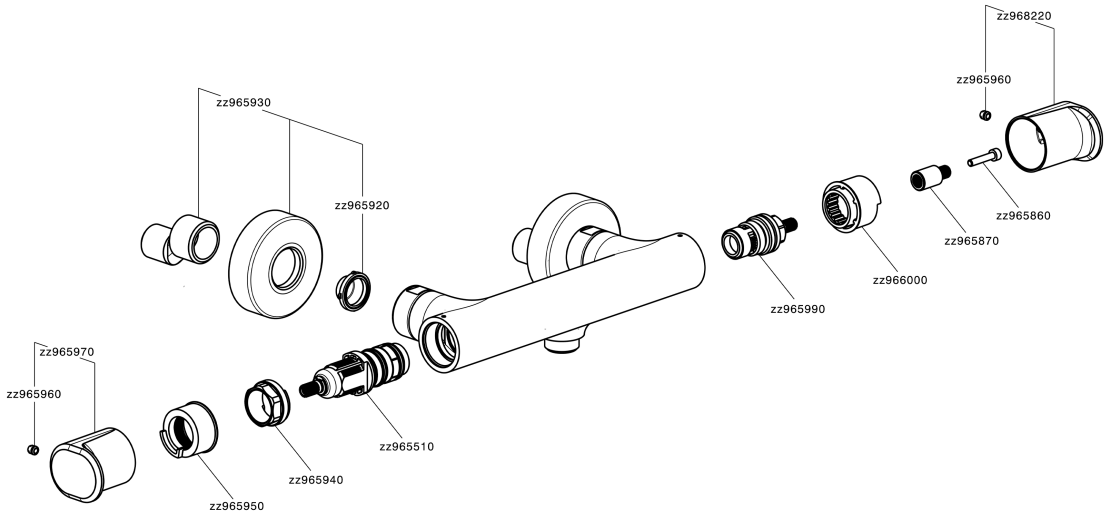

LYT01010

http://www.huberitalia.com/miscelatore-termostatico-doccia-levity-lyt01010

2026-02-27

© 2021 Huber. Via Brughiere, 50. 28017 - San Maurizio (NO) - Italy
Mail: huber@hubertitalia.com, Telefono: (+39) 0322 967783, P.Iva IT02422800033.