Miscelatore termostatico doccia CLINIC&TECHNICAL_CPT01010

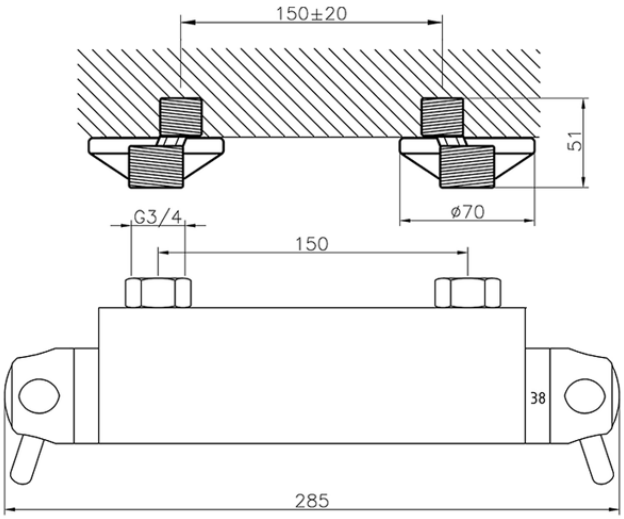

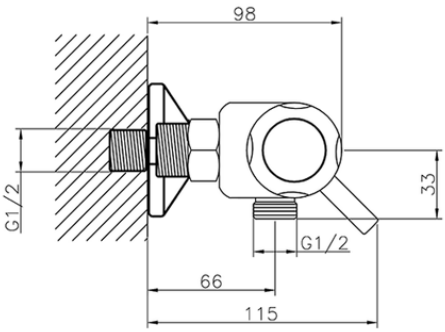

CPT01010 http://www.huberitalia.com/miscelatore-termostatico-doccia-clinictechnical-cpt01010

2026-03-13