Parte esterna monocomando incasso 2 uscite LEVITY_LY002300

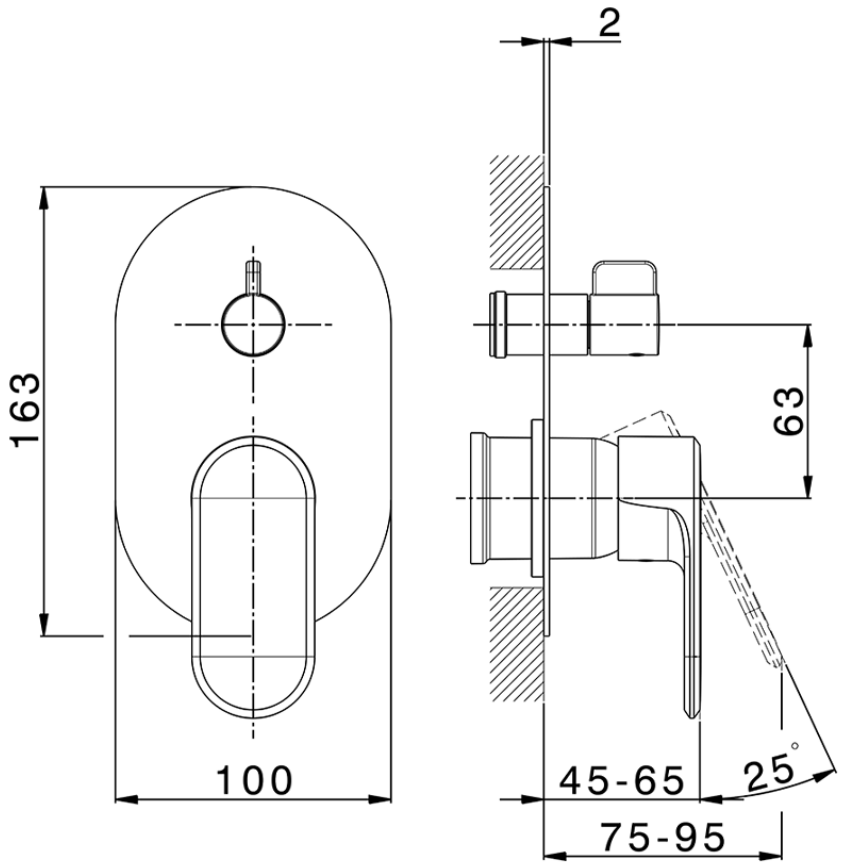

LY002300 http://www.huberitalia.com/parte-esterna-monocomando-incasso-2-uscite-levity-ly002300

© 2021 Huber. Via Brughiere, 50. 28017 - San Maurizio (NO) - Italy
Mail: huber@hubertitalia.com, Telefono: (+39) 0322 967783, P.Iva IT02422800033.

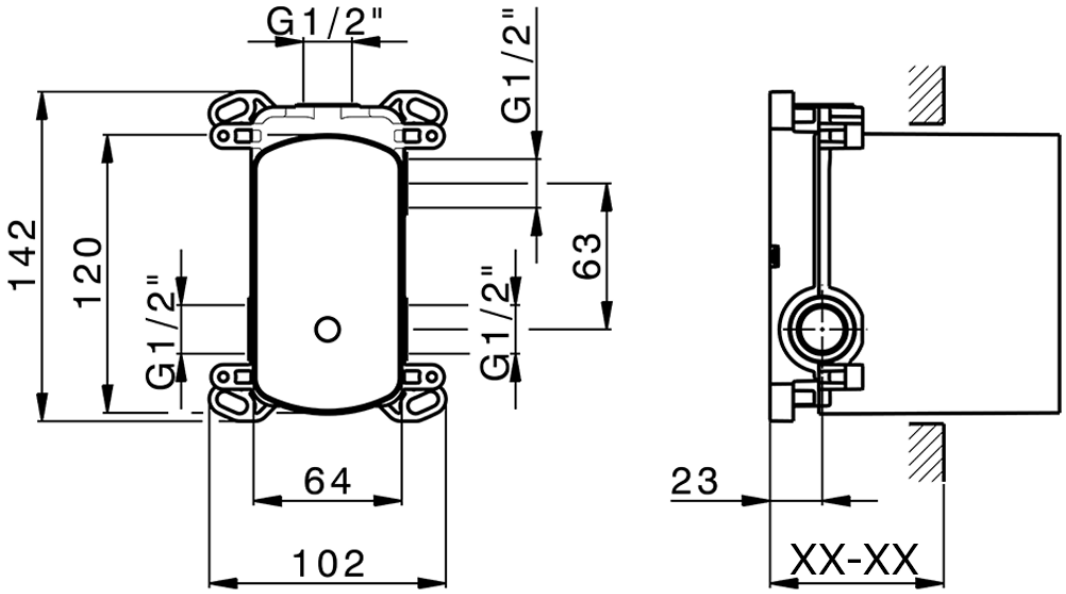

Piastra/Plate/Plaque/Platte/Placa

2-3mm: XX 65-85

10mm: XX 60-80

ZB000230 http://www.huberitalia.com/parte-incasso-monocomando-vasca-doccia-easy-box-incasso-zb000230

2026-11-25

© 2021 Huber. Via Brughiere, 50. 28017 - San Maurizio (NO) - Italy
Mail: huber@hubertitalia.com, Telefono: (+39) 0322 967783, P.Iva IT02422800033.