Rubinetto d'arresto incasso VICTORIAN_VT000310

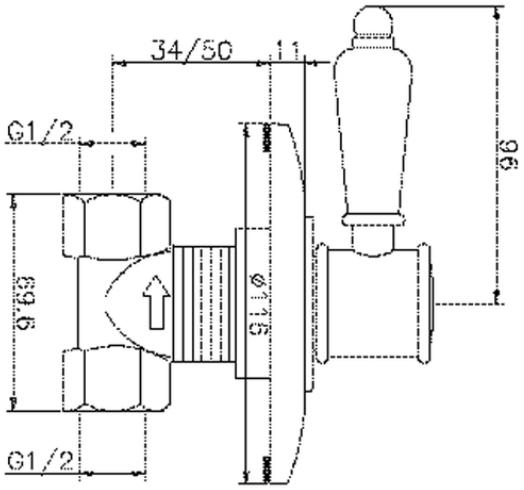

VT000310

http://www.huberitalia.com/rubinetto-darresto-incasso-victorian-vt000310

2026-04-17

© 2021 Huber. Via Brughiere, 50. 28017 - San Maurizio (NO) - Italy
Mail: huber@hubertitalia.com, Telefono: (+39) 0322 967783, P.Iva IT02422800033.