Huber
TEL. (+39) 0322 967783
MAIL. huber@huberitalia.com

Griglia porta salviette ACCESSORI BAGNO_SQ090300

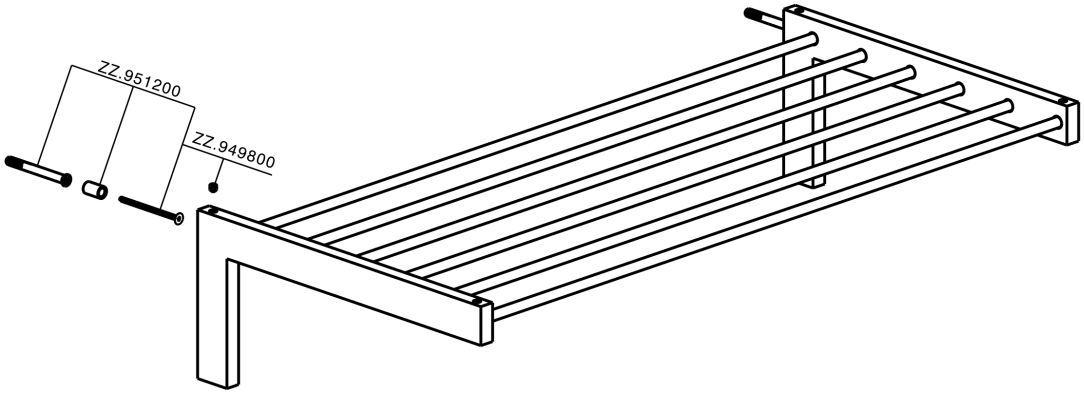

SQ090300

http://www.huberitalia.com/griglia-porta-salviette-accessori-bagno-sq090300

2026-10-17

© 2021 Huber. Via Brughiere, 50. 28017 - San Maurizio (NO) - Italy
Mail: huber@hubertitalia.com, Telefono: (+39) 0322 967783, P.Iva IT02422800033.