Miscelatore termostatico doccia CROISETTE_CST01010

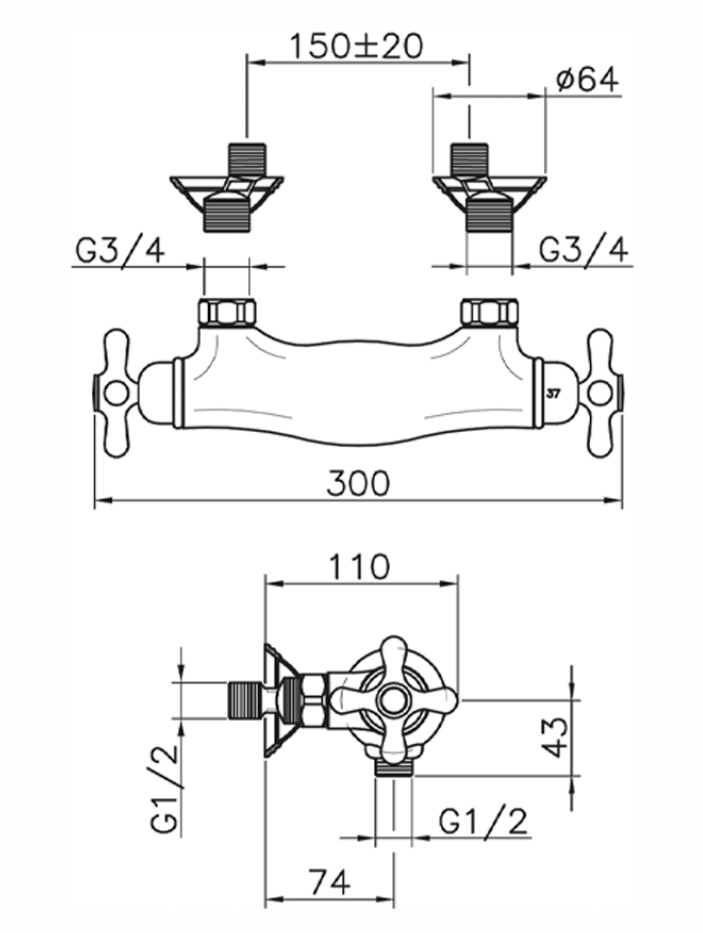

CST01010

http://www.huberitalia.com/miscelatore-termostatico-doccia-croisette-cst01010

2026-07-04

© 2021 Huber. Via Brughiere, 50. 28017 - San Maurizio (NO) - Italy
Mail: huber@hubertitalia.com, Telefono: (+39) 0322 967783, P.Iva IT02422800033.