Miscelatore termostatico doccia completo VICTORIAN_VTD01010

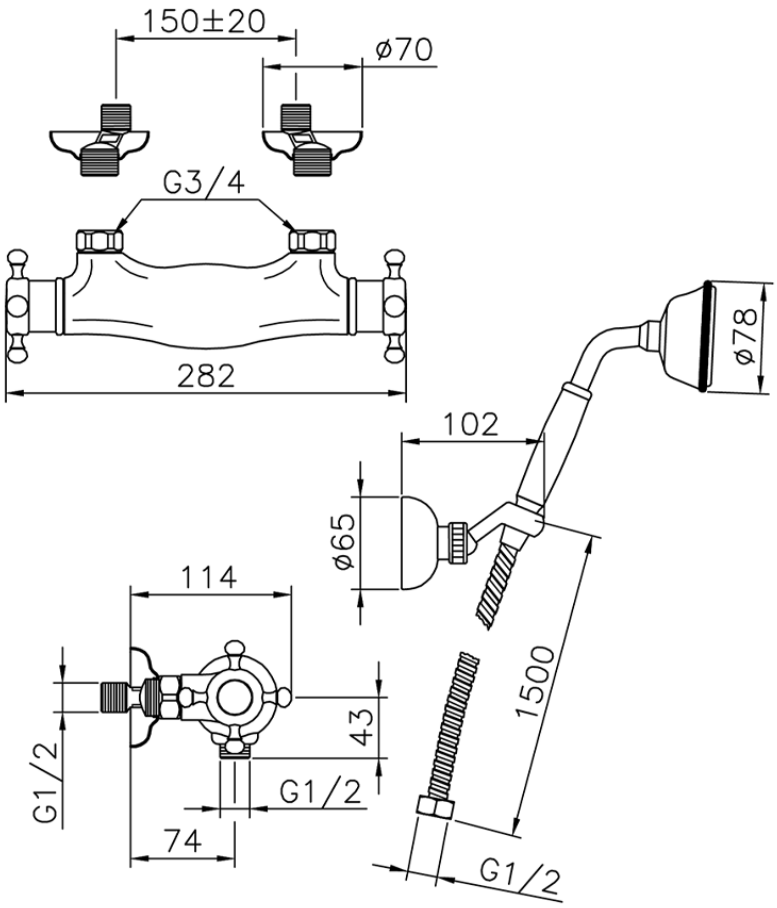

VTD01010 http://www.huberitalia.com/miscelatore-termostatico-doccia-completo-victorian-vtd01010

2026-05-26