Sifone lavabo 1"1/4 LYNOX_ZB004130

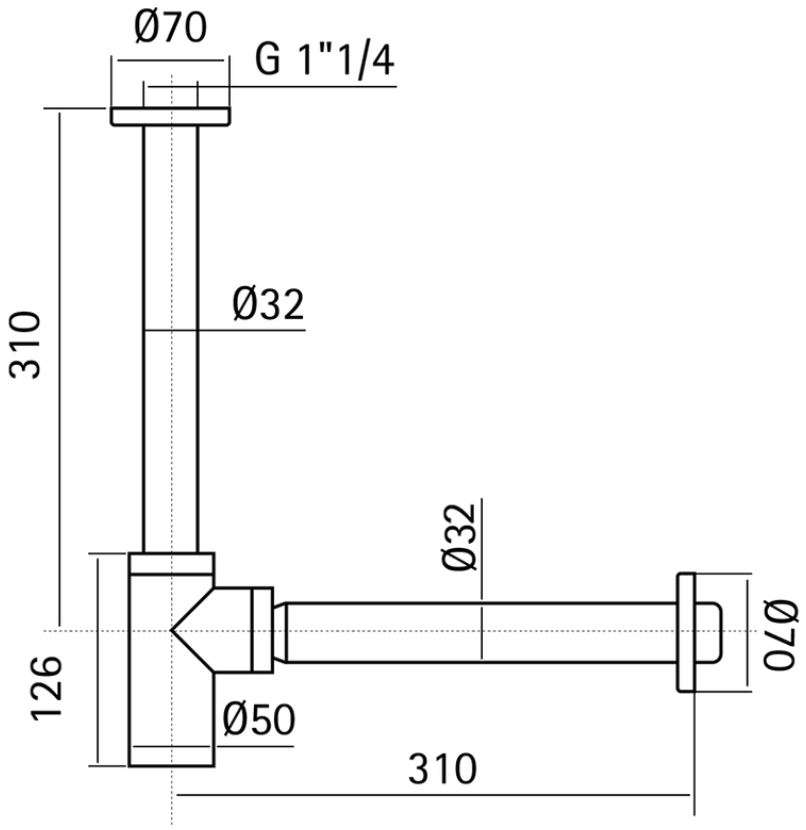

ZB004130

http://www.huberitalia.com/sifone-lavabo-11-4-lynox-zb004130

2026-03-07

© 2021 Huber. Via Brughiere, 50. 28017 - San Maurizio (NO) - Italy
Mail: huber@hubertitalia.com, Telefono: (+39) 0322 967783, P.Iva IT02422800033.