Porta salviette anello CROISETTE_4018.01H.

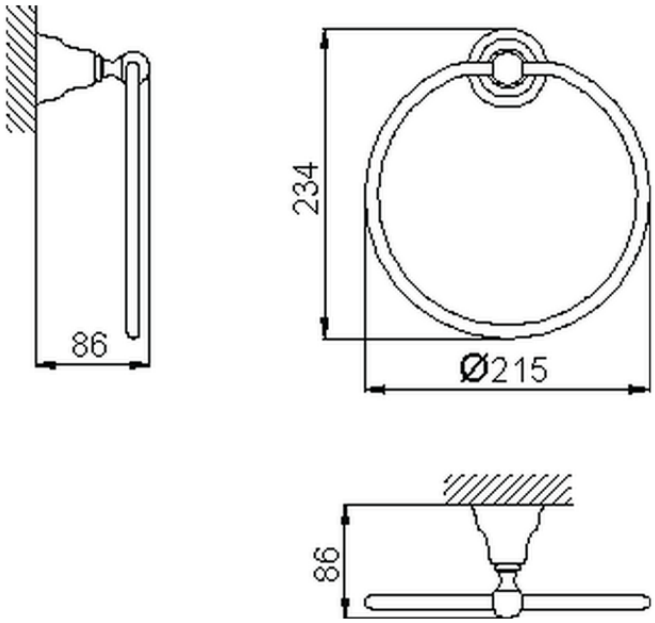

4018.01H.

http://www.huberitalia.com/porta-salviette-anello-croisette-4018-01h

2026-09-15

© 2021 Huber. Via Brughiere, 50. 28017 - San Maurizio (NO) - Italy
Mail: huber@hubertitalia.com, Telefono: (+39) 0322 967783, P.Iva IT02422800033.