Miscelatore monocomando lavabo alto LEVITY_LY003554

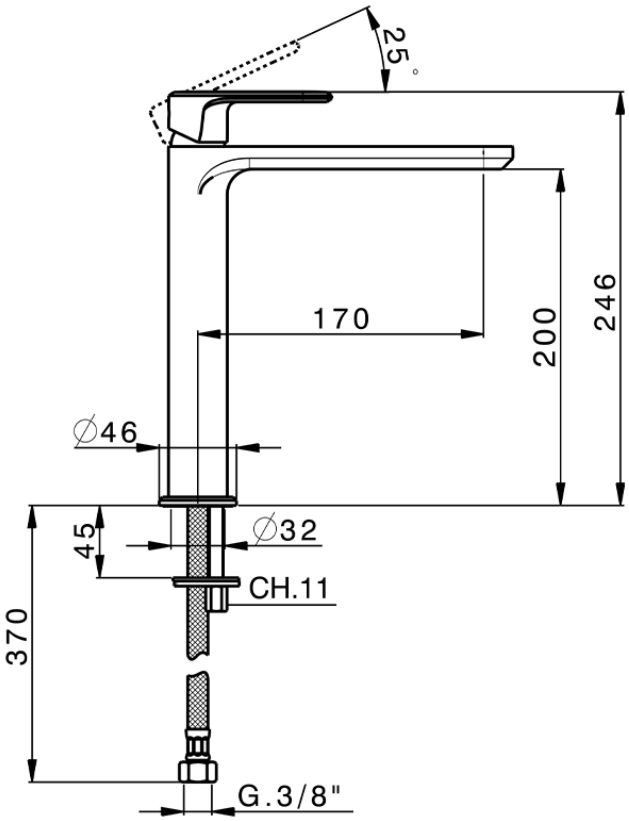

LY003554 http://www.huberitalia.com/miscelatore-monocomando-lavabo-alto-levity-ly003554

2026-09-17