Miscelatore termostatico vasca VICTORIAN_VTT27010

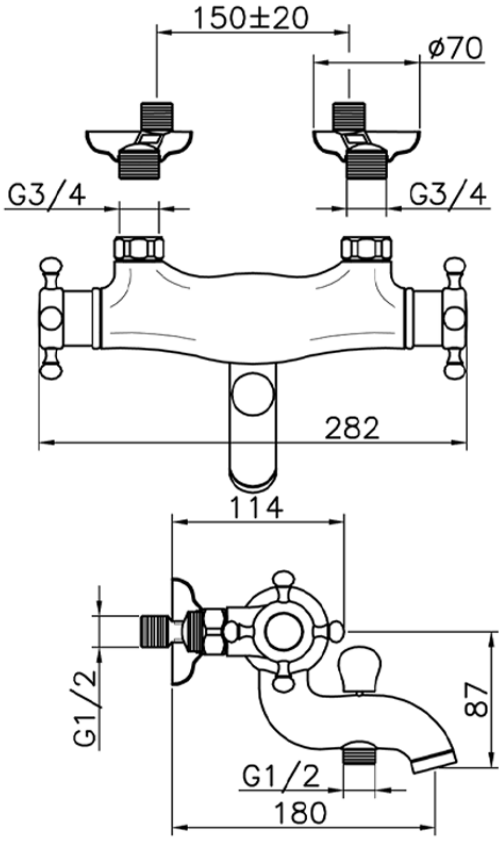

VTT27010

http://www.huberitalia.com/miscelatore-termostatico-vasca-victorian-vtt27010

2026-10-22

© 2021 Huber. Via Brughiere, 50. 28017 - San Maurizio (NO) - Italy
Mail: huber@hubertitalia.com, Telefono: (+39) 0322 967783, P.Iva IT02422800033.