Miscelatore monocomando lavabo alto M32_MT004544

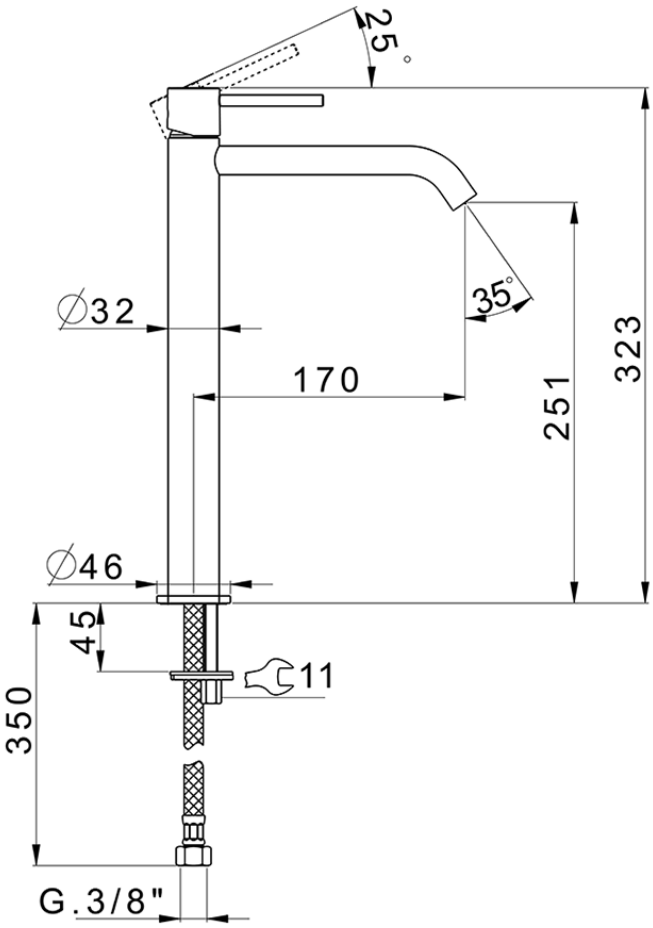

MT004544 http://www.huberitalia.com/miscelatore-monocomando-lavabo-alto-m32-mt004544

2026-09-17