Miscelatore monocomando lavabo alto HARLOCK_HK003554

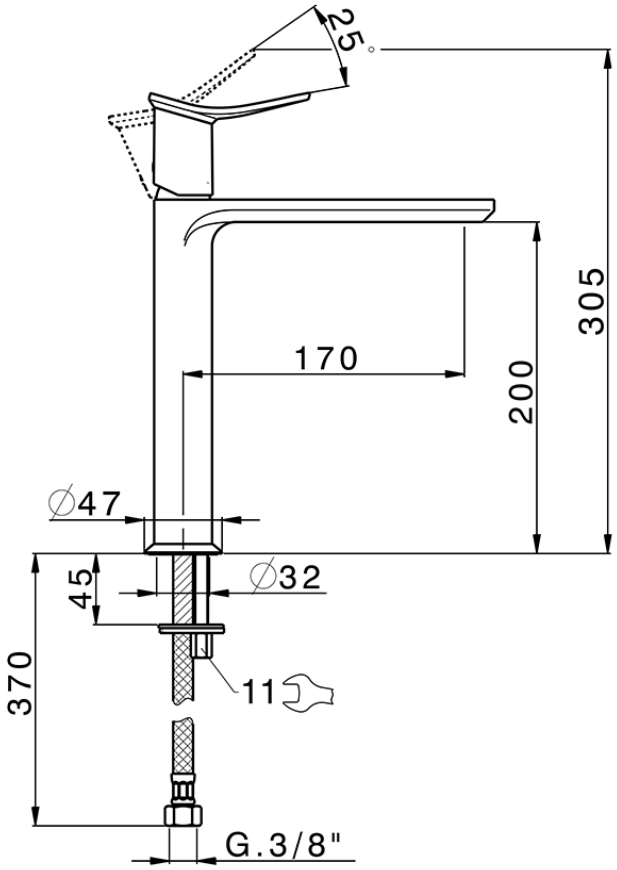

HK003554 http://www.huberitalia.com/miscelatore-monocomando-lavabo-alto-harlock-hk003554

2026-09-17