Piletta 1"1/4 per lavabo COMPLEMENTI_ZB001613

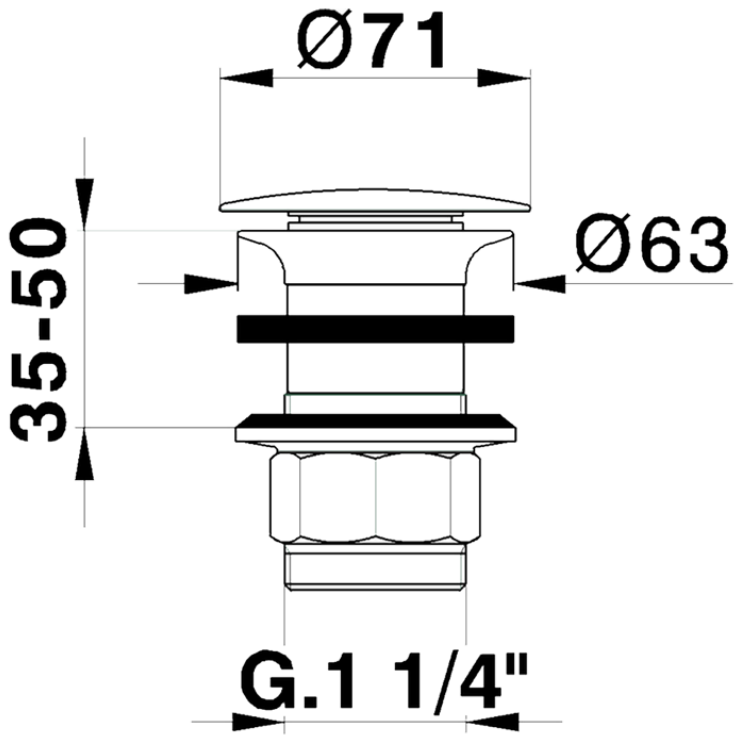

ZB001613

http://www.huberitalia.com/piletta-11-4-per-lavabo-complementi-zb001613

2026-09-13

© 2021 Huber. Via Brughiere, 50. 28017 - San Maurizio (NO) - Italy
Mail: huber@hubertitalia.com, Telefono: (+39) 0322 967783, P.Iva IT02422800033.