Miscelatore monocomando bidet EnergySave BACCARAT_BC000555

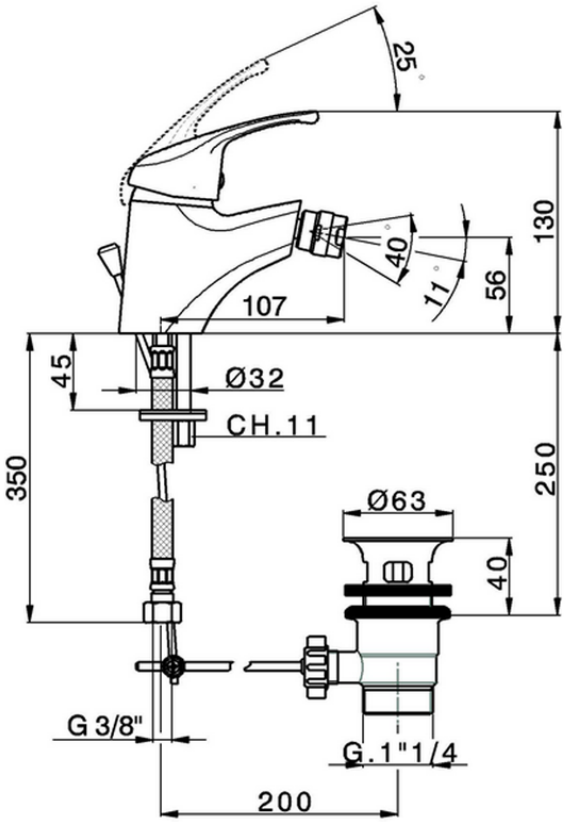

BC000555 http://www.huberitalia.com/miscelatore-monocomando-bidet-energysave-baccarat-bc000555

2026-05-15