Completo miscelatore termostatico doccia incasso VICTORIAN

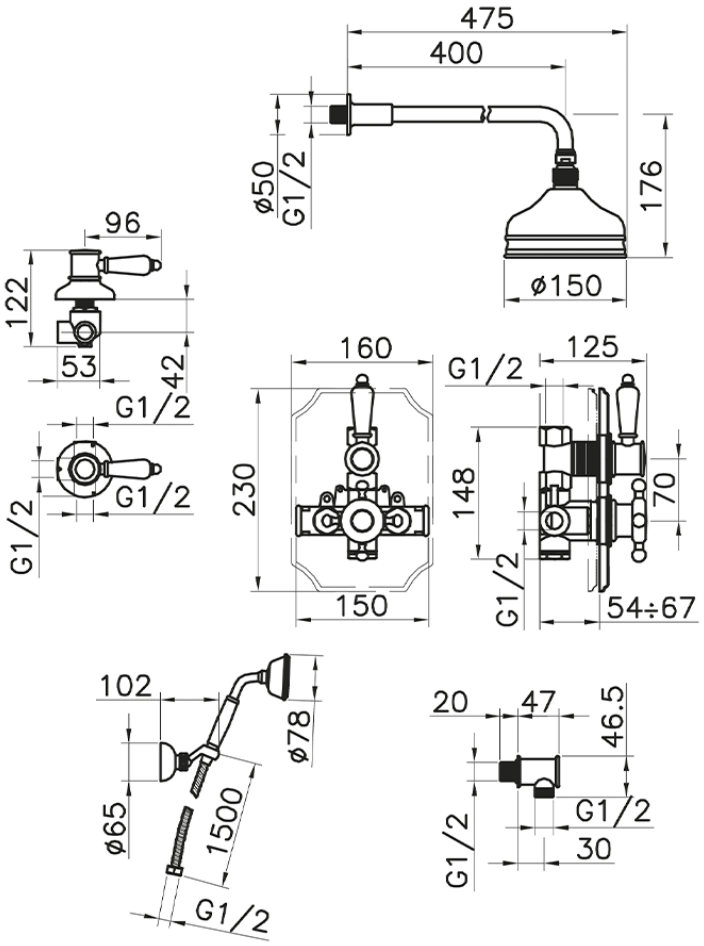

913.VT01H. https://www.huberitalia.com/completo-miscelatore-termostatico-doccia-incasso-victorian913-vt01h

2024-05-03