Miscelatore monocomando lavabo CROISETTE_CM000510

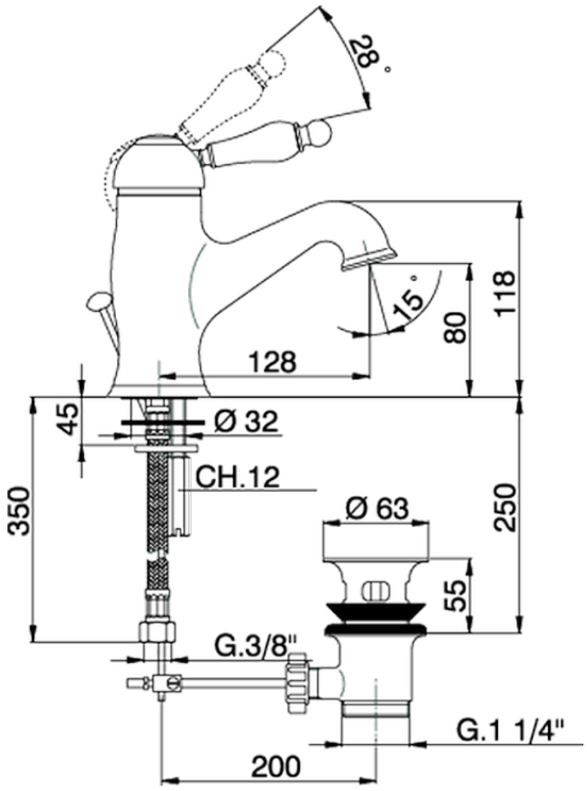

CM000510 https://www.huberitalia.com/miscelatore-monocomando-lavabo-croisette-cm000510

2026-04-24