Piletta click-clack 1"1/4 per lavabo COMPLEMENTI_ZB001620

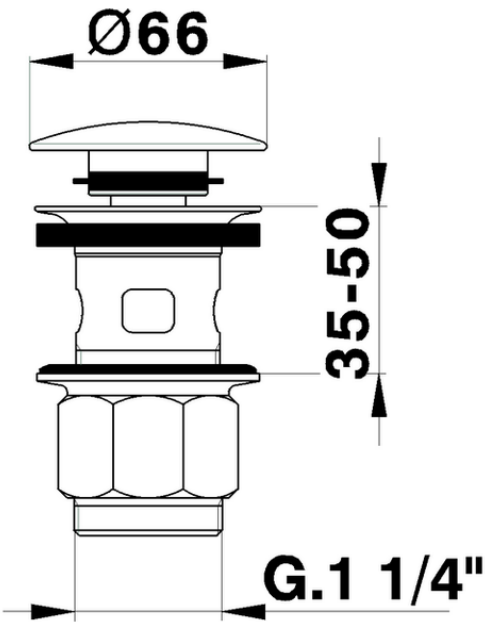

ZB001620 https://www.huberitalia.com/piletta-click-clack-11-4-per-lavabo-complementi-zb001620

2026-09-15

© 2021 Huber. Via Brughiere, 50. 28017 - San Maurizio (NO) - Italy
Mail: huber@hubertitalia.com, Telefono: (+39) 0322 967783, P.Iva IT02422800033.