Miscelatore monocomando lavabo HARLOCK_HC000544

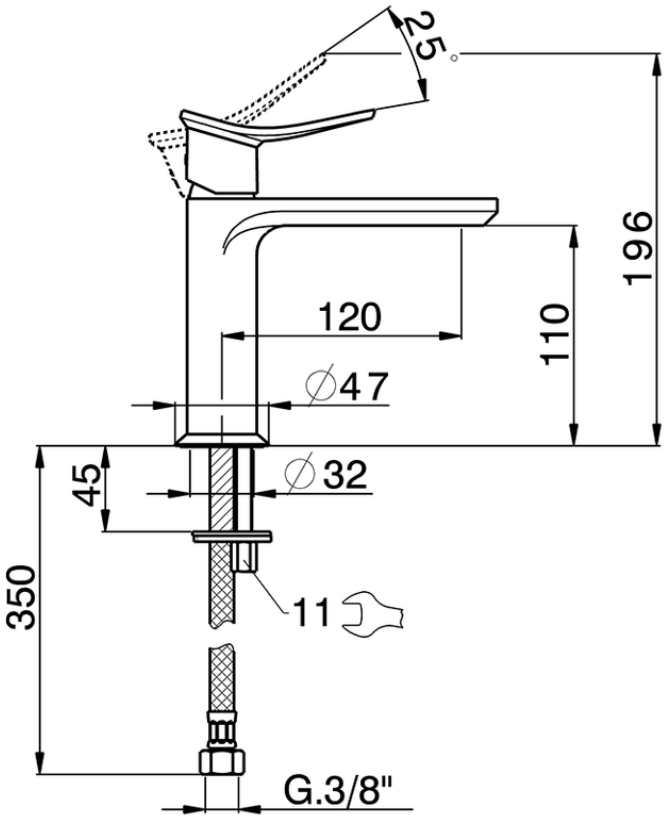

HC000544 https://www.huberitalia.com/miscelatore-monocomando-lavabo-harlock-hc000544

2026-06-17