Sifone minimale 1"1/4 COMPLEMENTI_ZB004042

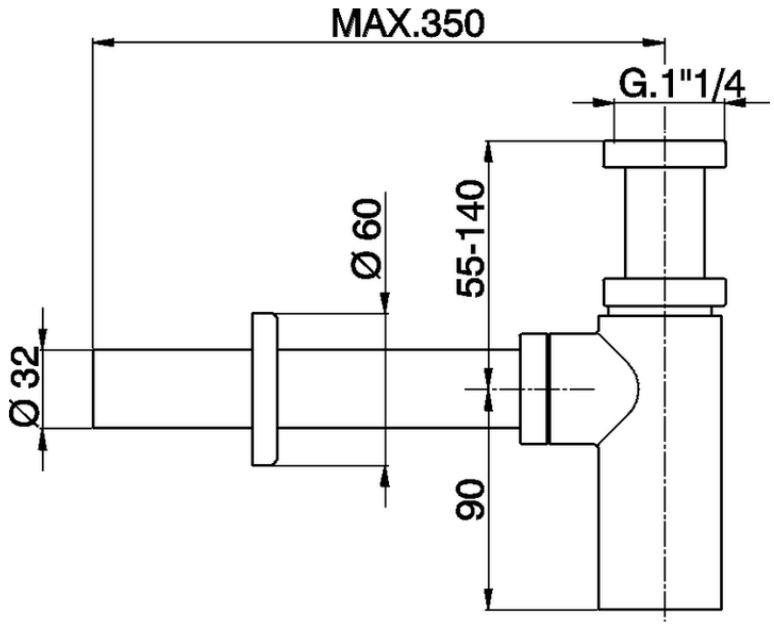

ZB004042

https://www.huberitalia.com/sifone-minimale-11-4-complementi-zb004042

2026-09-15

© 2021 Huber. Via Brughiere, 50. 28017 - San Maurizio (NO) - Italy
Mail: huber@hubertitalia.com, Telefono: (+39) 0322 967783, P.Iva IT02422800033.