Miscelatore monocomando lavabo/lavello KITCHEN_NE000534

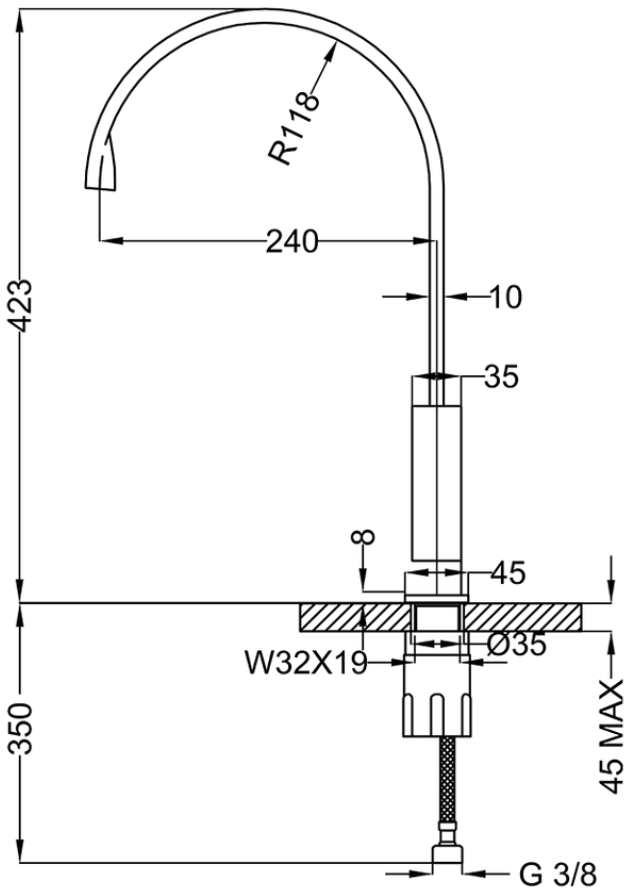

NE000534 https://www.huberitalia.com/miscelatore-monocomando-lavabo-lavello-kitchen-ne000534

2026-04-30