Bocca di erogazione PUSH&SHOWER_ZB0G5100

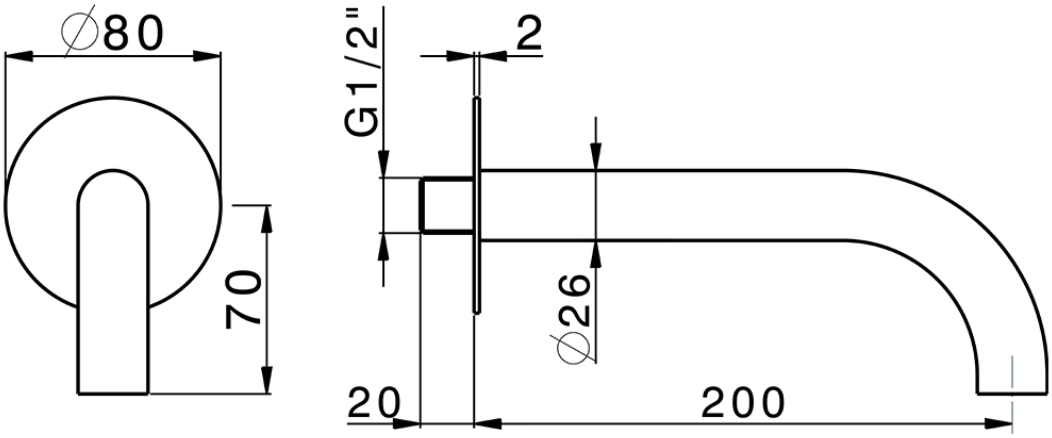

ZB0G5100

https://www.huberitalia.com/bocca-di-erogazione-pushshower-zb0g5100

2026-10-30

© 2021 Huber. Via Brughiere, 50. 28017 - San Maurizio (NO) - Italy
Mail: huber@hubertitalia.com, Telefono: (+39) 0322 967783, P.Iva IT02422800033.