Piletta click-clack 1"1/4 per lavabo LYNOX_ZB001800

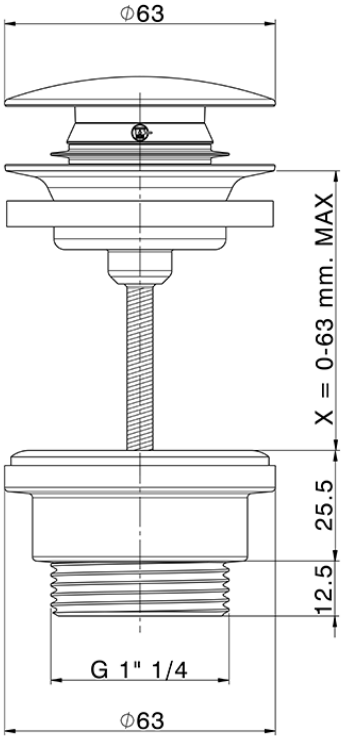

ZB001800

https://www.huberitalia.com/piletta-click-clack-11-4-per-lavabo-lynox-zb001800

2026-01-02