Miscelatore termostatico bidet CROISETTE_CST56010

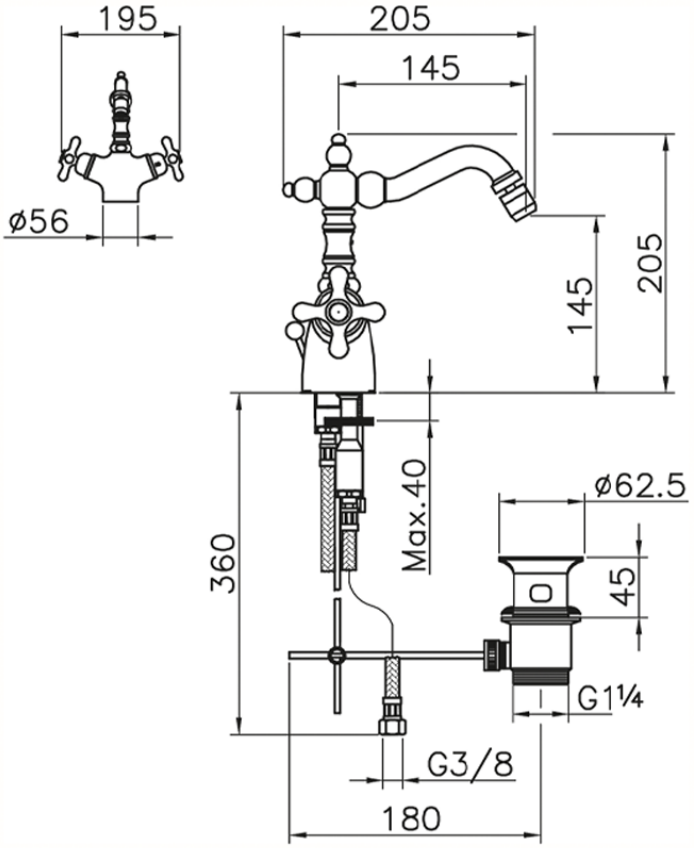

CST56010

https://www.huberitalia.com/miscelatore-termostatico-bidet-croisette-cst56010

2026-10-12