Parte esterna monocomando lavabo a parete H3_AH005512

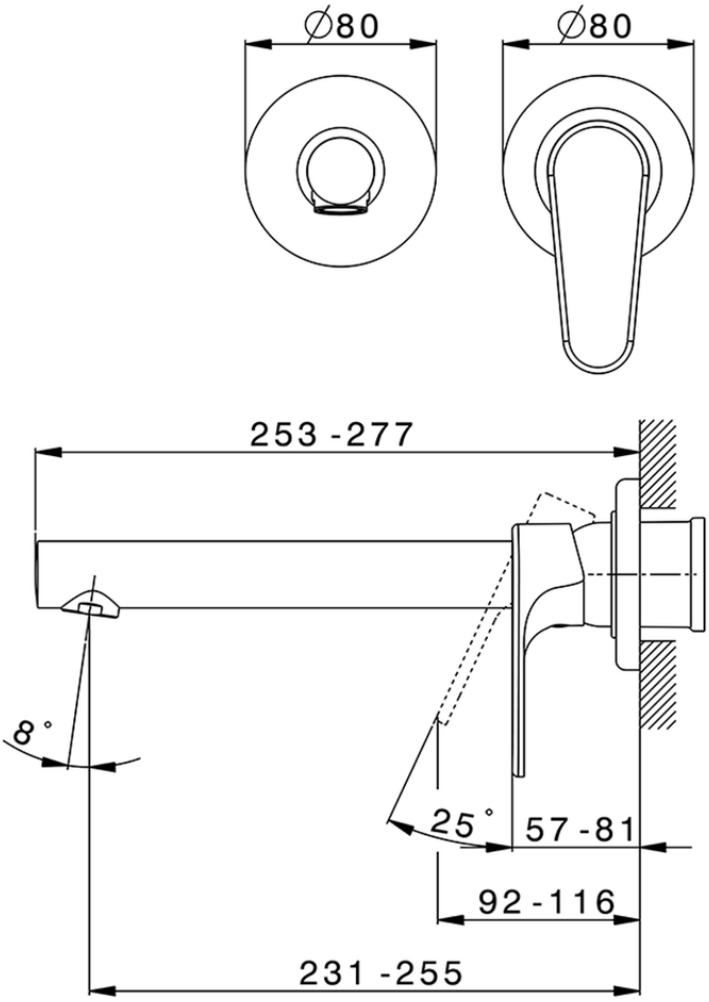

AH005512 https://www.huberitalia.com/parte-esterna-monocomando-lavabo-a-parete-h3-ah005512

© 2021 Huber. Via Brughiere, 50. 28017 - San Maurizio (NO) - Italy
Mail: huber@hubertitalia.com, Telefono: (+39) 0322 967783, P.Iva IT02422800033.

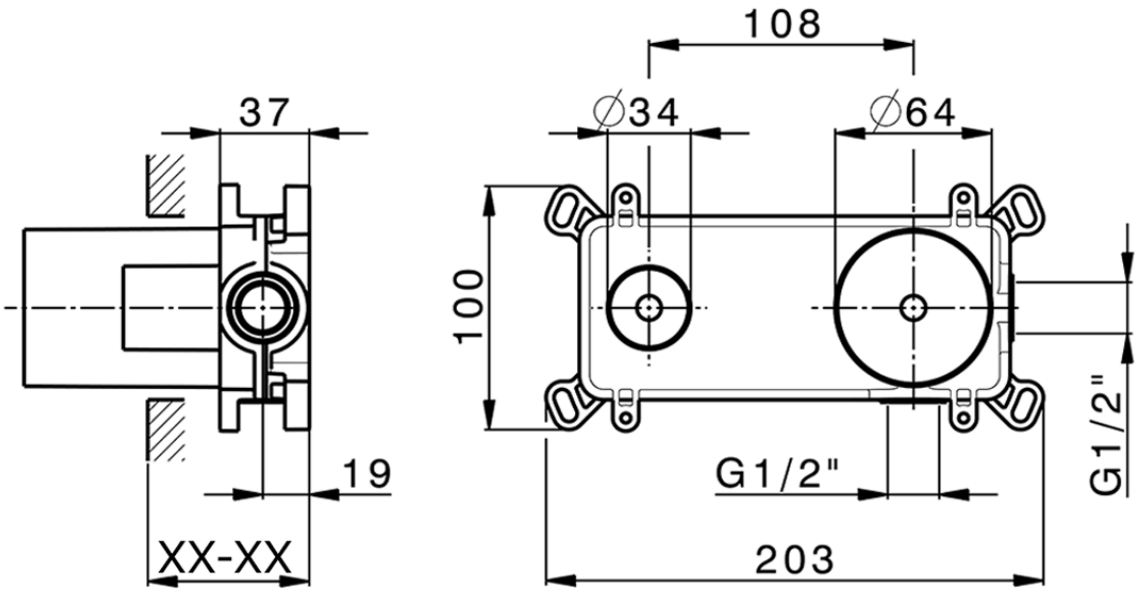

Piastra/Plate/Plaque/Platte/Placa

2-3mm: XX 56-76

10mm: XX 48-68

ZB002450 https://www.huberitalia.com/parte-incasso-monocomando-lavabo-a-parete-easy-box-incasso-zb002450

2026-06-25