Set doccetta igienica completo IDROSCOPINI_VT007926

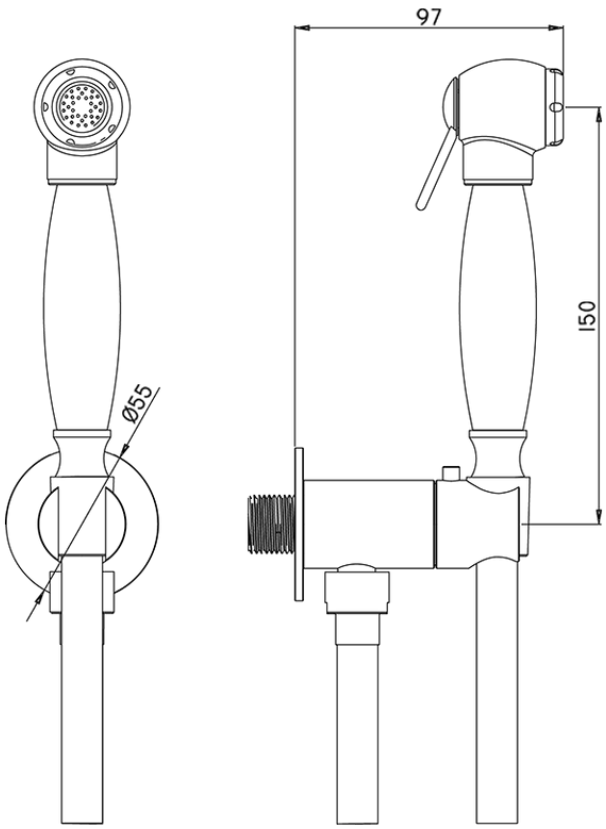

VT007926 https://www.huberitalia.com/set-doccetta-igienica-completo-idroscopini-vt007926

2026-11-25

© 2021 Huber. Via Brughiere, 50. 28017 - San Maurizio (NO) - Italy
Mail: huber@hubertitalia.com, Telefono: (+39) 0322 967783, P.Iva IT02422800033.