Miscelatore monocomando bidet NORMA_NM000551

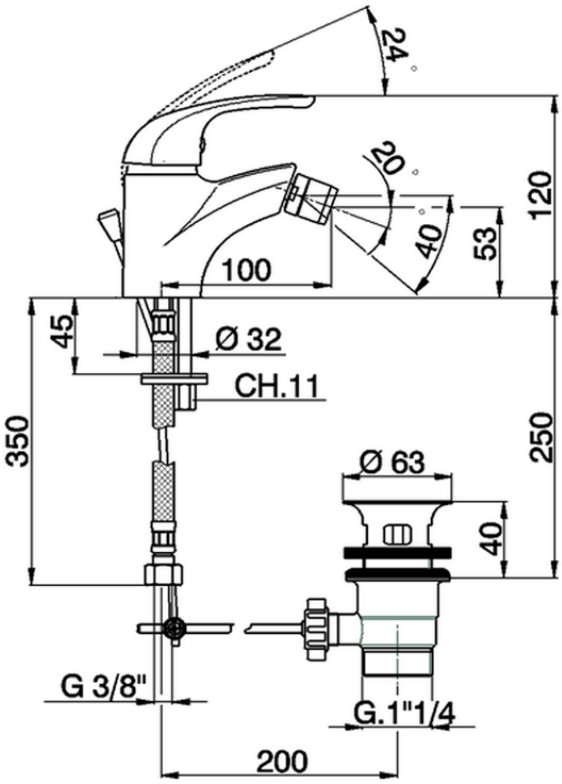

NM000551 https://www.huberitalia.com/miscelatore-monocomando-bidet-norma-nm000551

2026-06-28