Miscelatore termostatico doccia completo LEVITY_LYD01010

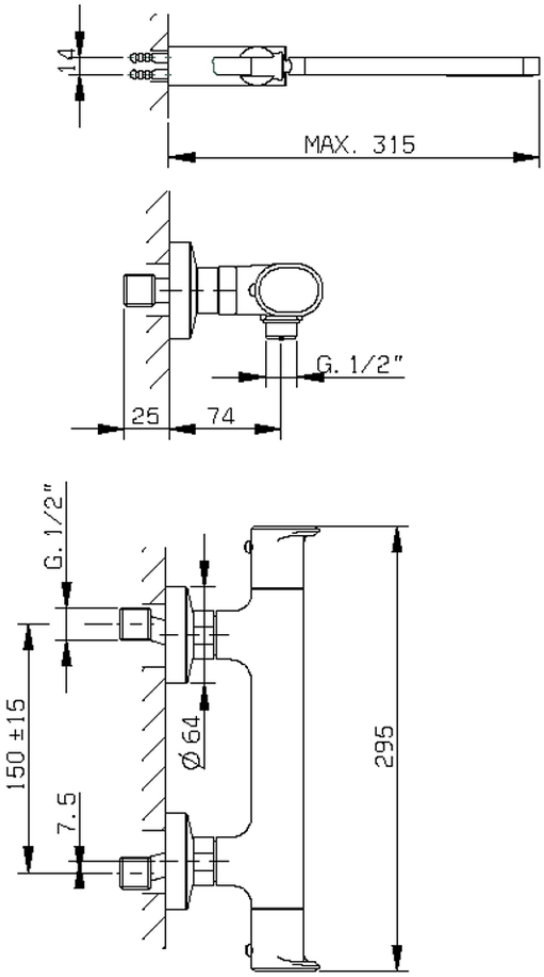

LYD01010 https://www.huberitalia.com/miscelatore-termostatico-doccia-completo-levity-lyd01010

2026-11-25

© 2021 Huber. Via Brughiere, 50. 28017 - San Maurizio (NO) - Italy
Mail: huber@hubertitalia.com, Telefono: (+39) 0322 967783, P.Iva IT02422800033.