Miscelatore monocomando lavabo NORMA_NM000511

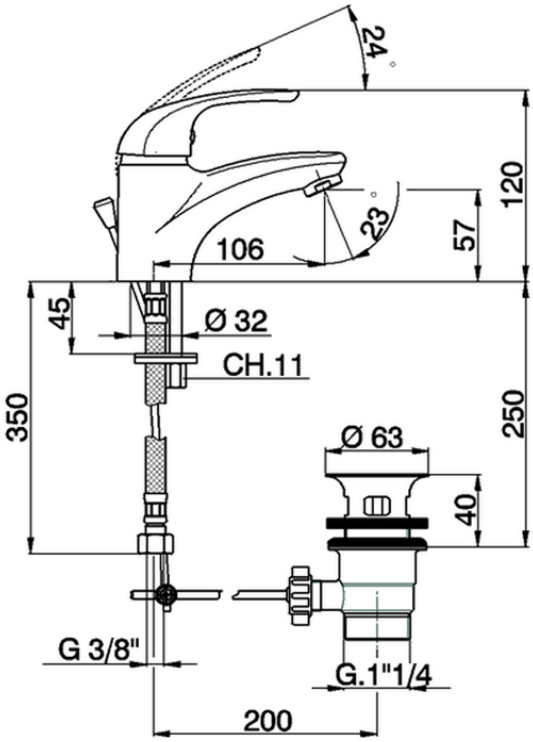

NM000511 https://www.huberitalia.com/miscelatore-monocomando-lavabo-norma-nm000511

2026-06-28

© 2021 Huber. Via Brughiere, 50. 28017 - San Maurizio (NO) - Italy
Mail: huber@hubertitalia.com, Telefono: (+39) 0322 967783, P.Iva IT02422800033.