Soffione a soffitto con cromoterapia Ø 550 mm ZEN_ZS1C0030

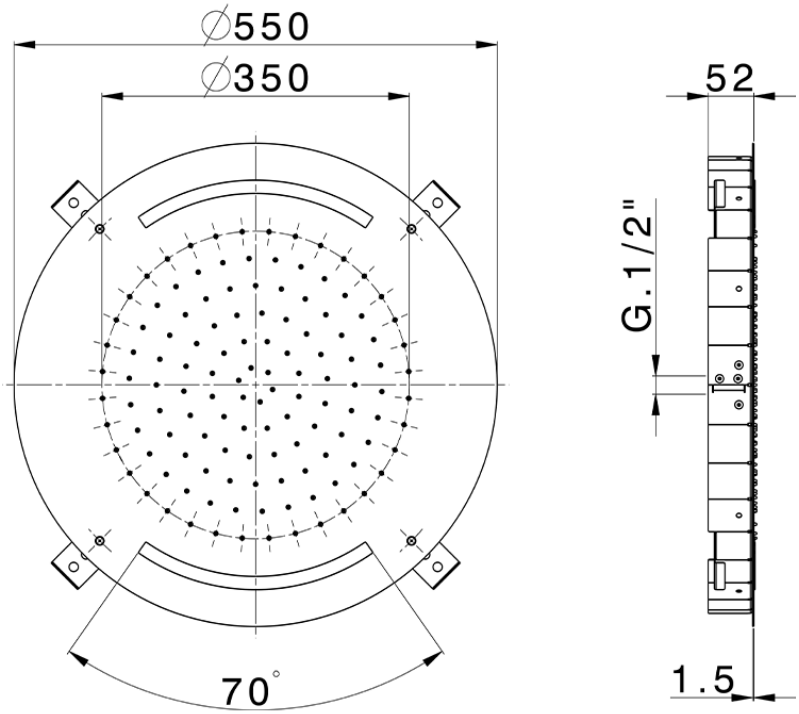

ZS1C0030 https://www.huberitalia.com/soffione-a-soffitto-con-cromoterapia-o-550-mm-zen-zs1c0030

2026-09-28