Miscelatore termostatico vasca CROISETTE_CST27010

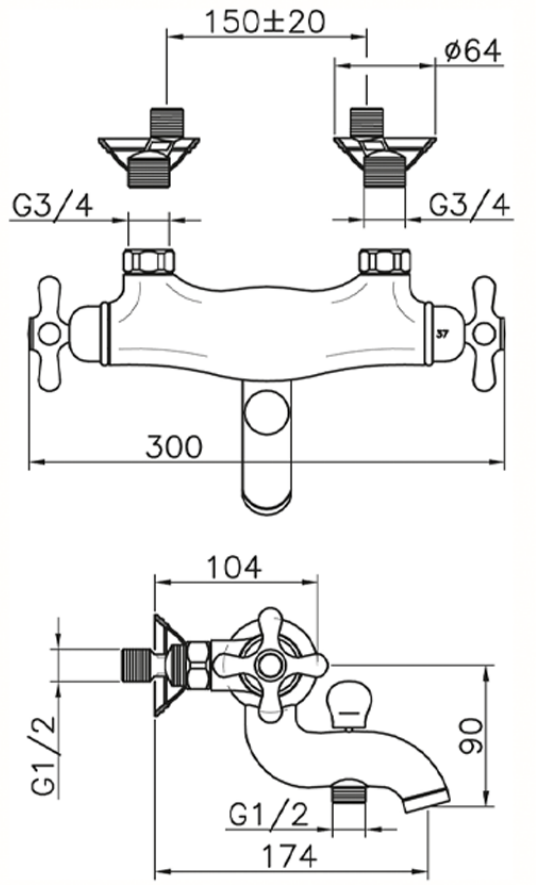

CST27010

https://www.huberitalia.com/miscelatore-termostatico-vasca-croisette-cst27010

2025-05-11