Miscelatore termostatico bidet VICTORIAN_VTT56010

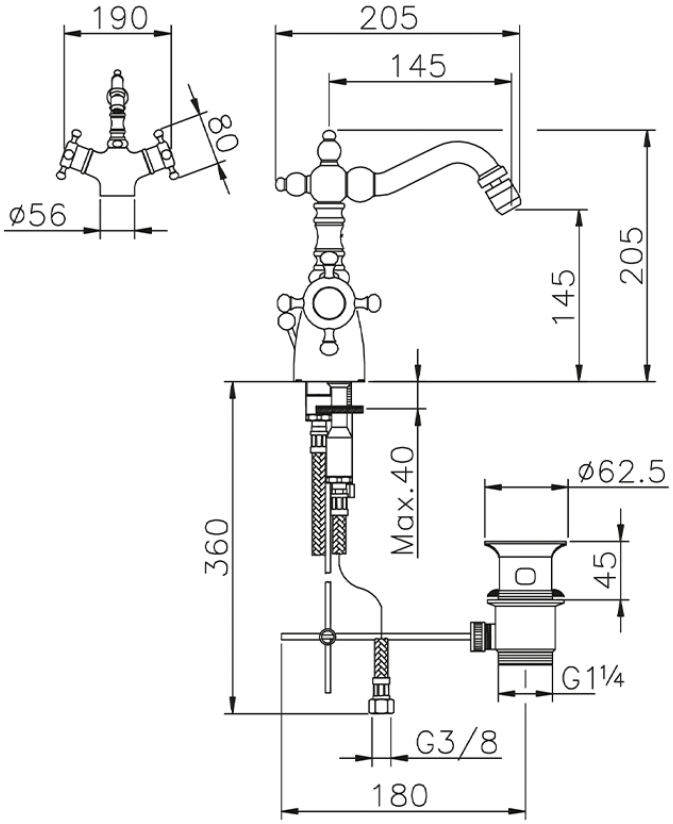

VTT56010

https://www.huberitalia.com/miscelatore-termostatico-bidet-victorian-vtt56010

2026-04-14

© 2021 Huber. Via Brughiere, 50. 28017 - San Maurizio (NO) - Italy
Mail: huber@hubertitalia.com, Telefono: (+39) 0322 967783, P.Iva IT02422800033.