Parte esterna termostatico incasso 3 uscite M32_MT018200

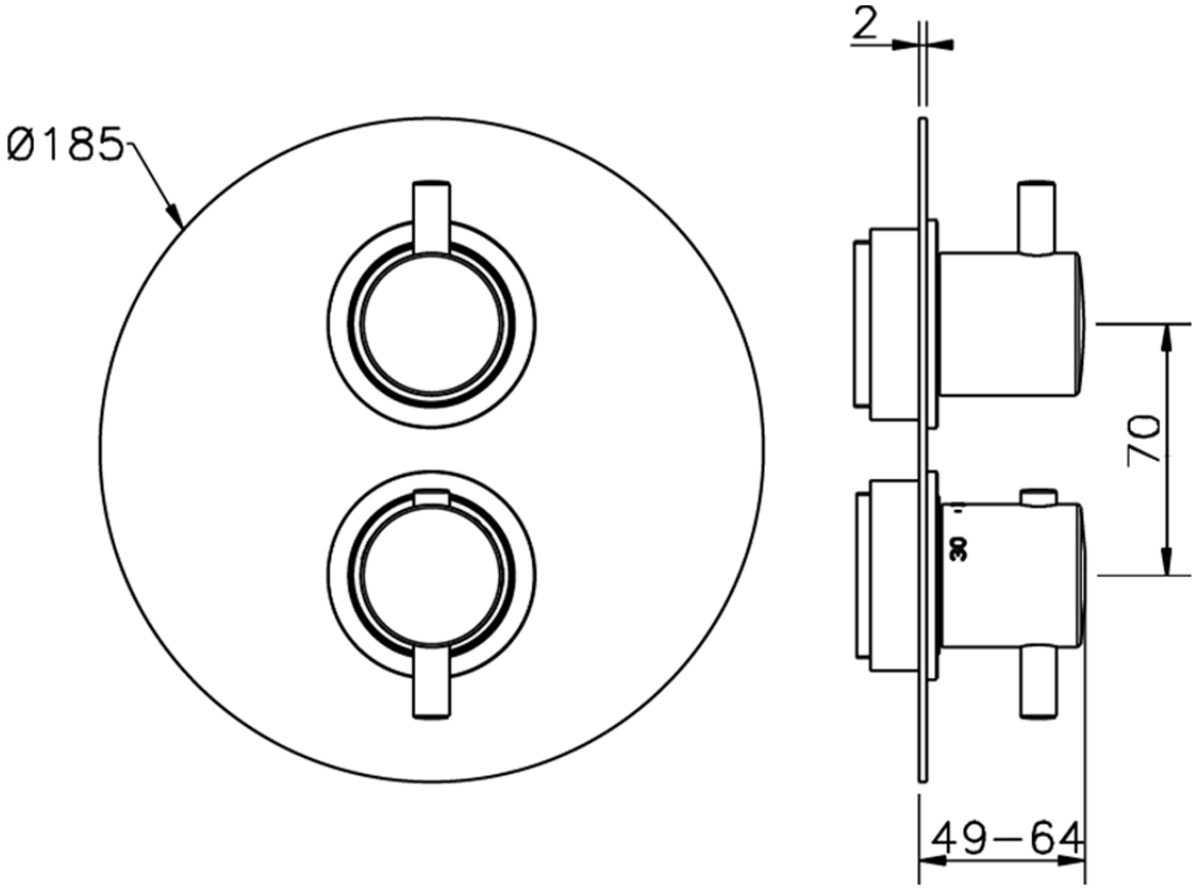

MT018200 https://www.huberitalia.com/parte-esterna-termostatico-incasso-3-uscite-m32-mt018200

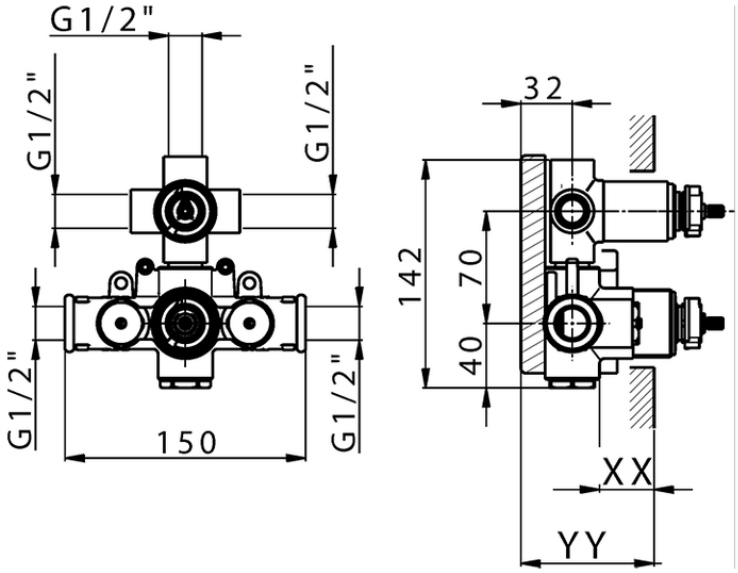

Piastra/Plate/Plaque/Platte/Placa
2-3mm: XX 25-40 YY 76-91
10 mm: XX 16-31 YY 65-80

ZB018201 https://www.huberitalia.com/parte-incasso-termostatico-doccia-3-uscite-incasso-zb018201

2026-10-05

© 2021 Huber. Via Brughiere, 50. 28017 - San Maurizio (NO) - Italy
Mail: huber@hubertitalia.com, Telefono: (+39) 0322 967783, P.Iva IT02422800033.