Miscelatore monocomando lavabo EnergySave CHRONOS_CR000485

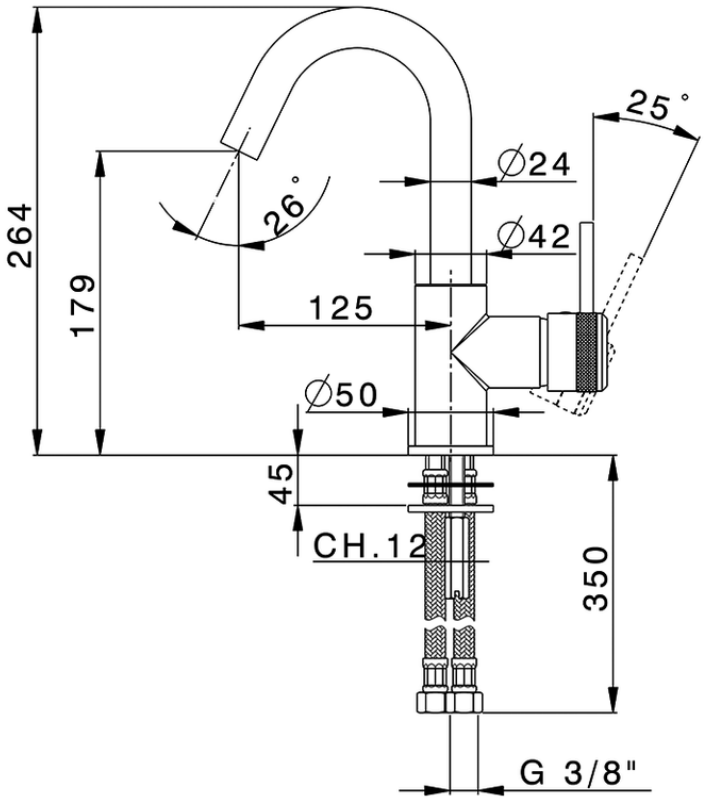

CR000485 https://www.huberitalia.com/miscelatore-monocomando-lavabo-energysave-chronos-cr000485

2026-06-18