# Completo doccia duplex SHOWER_SS018240

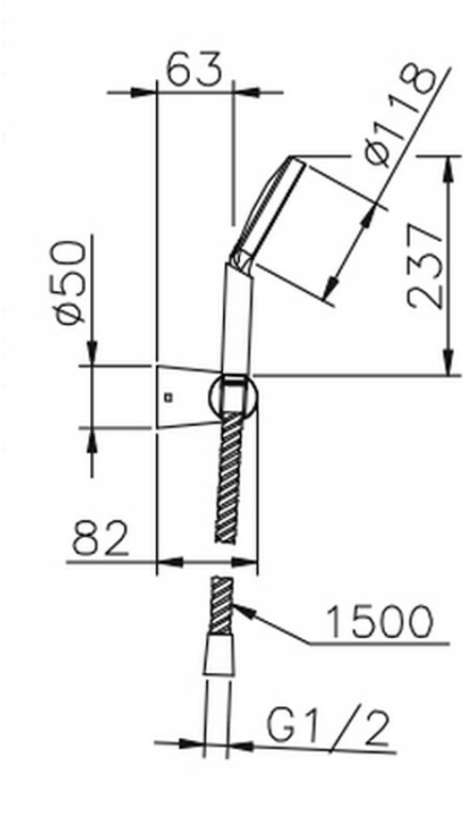


SS018240

https://www.huberitalia.com/completo-doccia-duplex-shower-ss018240

2026-06-28