Miscelatore monocomando bidet EnergySave K2_K2002555

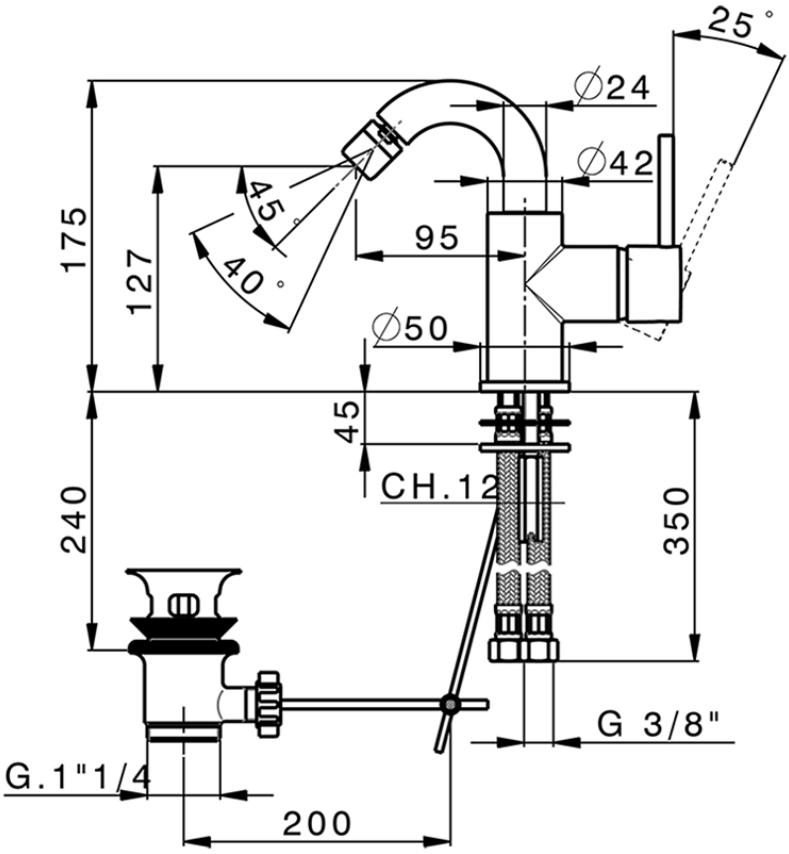

K2002555 https://www.huberitalia.com/miscelatore-monocomando-bidet-energysave-k2-k2002555

2026-04-29