Miscelatore monocomando lavabo EnergySave SATURNO

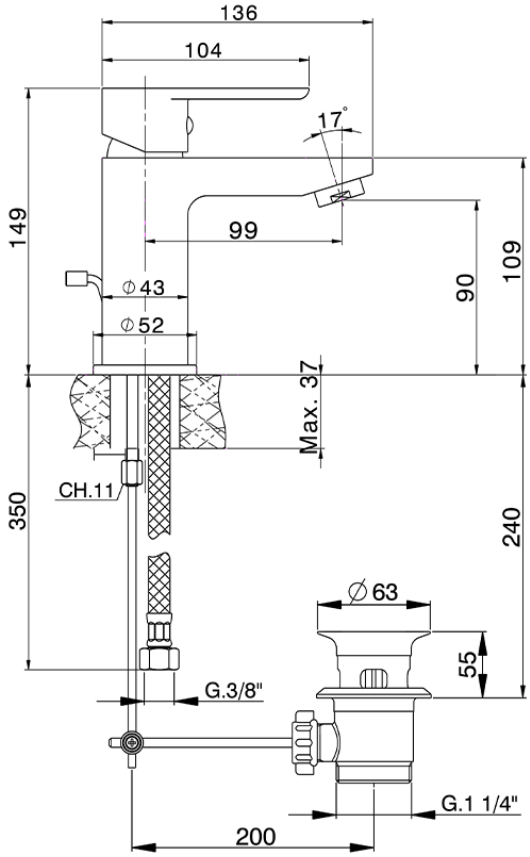

SN000515 https://www.huberitalia.com/miscelatore-monocomando-lavabo-energysave-saturnosn000515

2024-05-01