Miscelatore monocomando lavabo EnergySave H3_AH000545

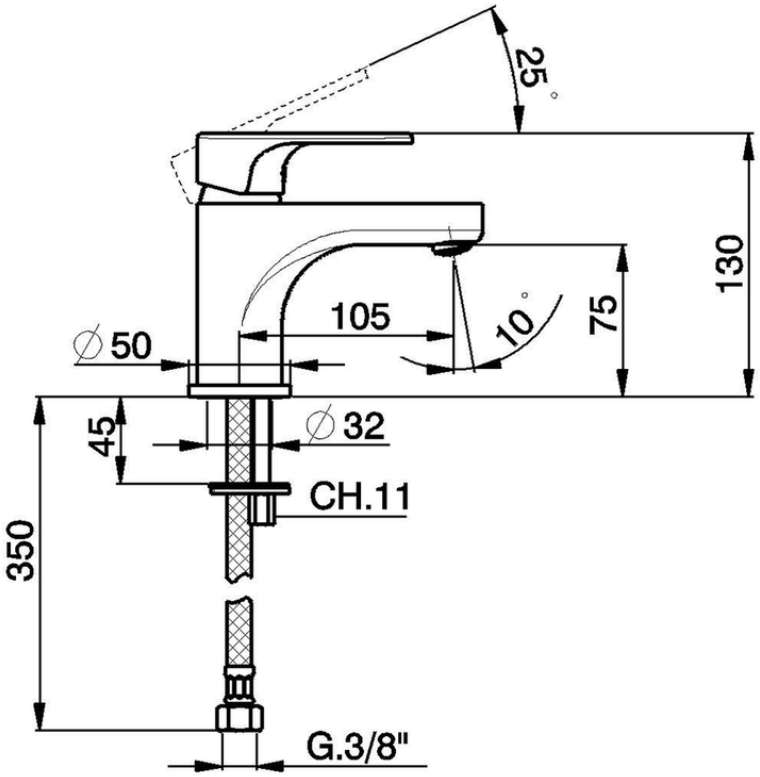

AH000545 https://www.huberitalia.com/miscelatore-monocomando-lavabo-energysave-h3-ah000545

2026-05-03