Completo doccia saliscendi SHOWER_SS010040

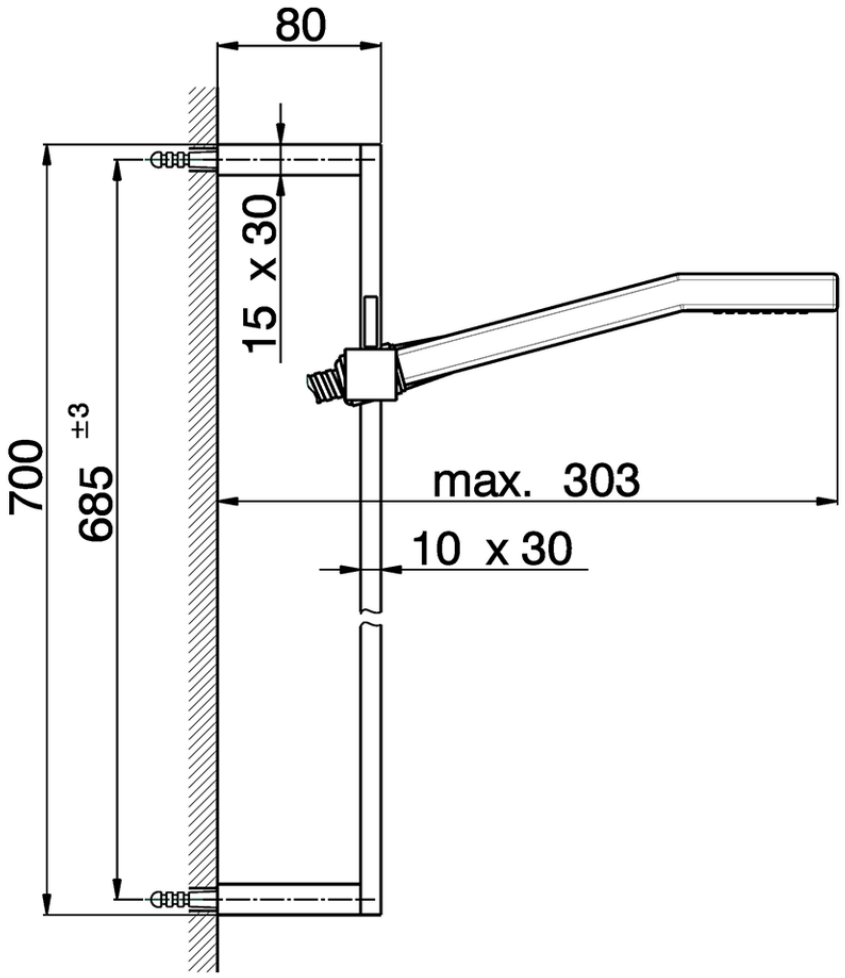

SS010040

https://www.huberitalia.com/completo-doccia-saliscendi-shower-ss010040

2026-06-19