# Completo doccia saliscendi SHOWER_SS010040

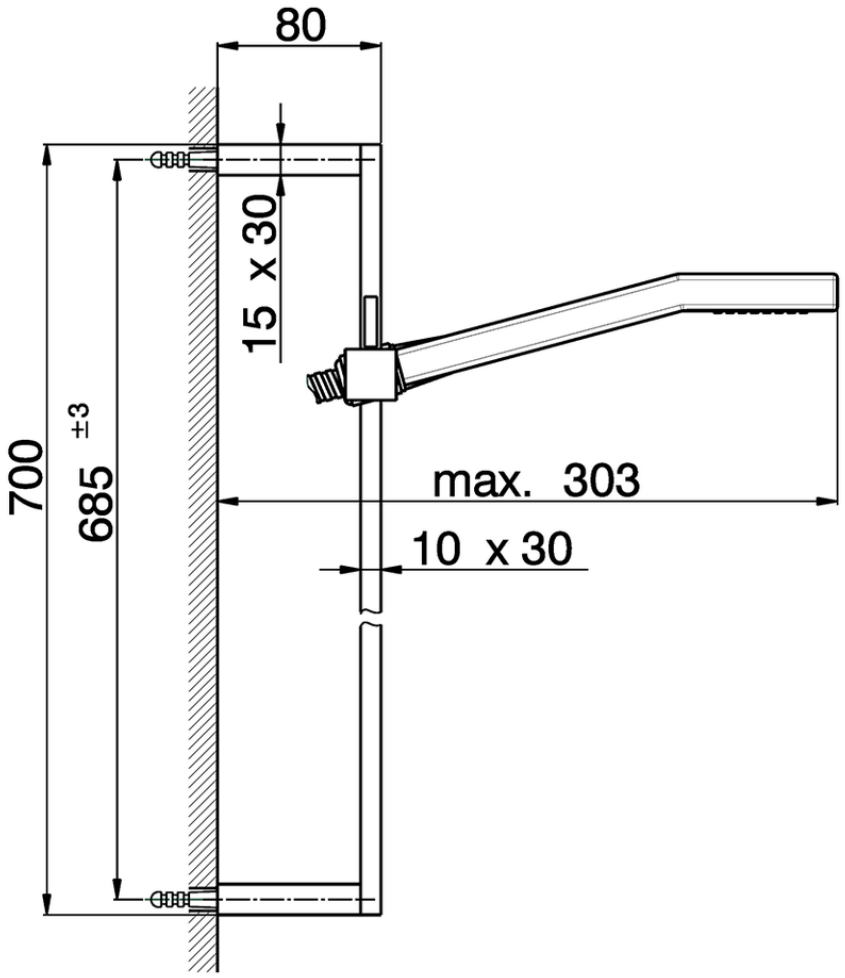


SS010040

https://www.huberitalia.com/completo-doccia-saliscendi-shower-ss010040

2025-10-21