Miscelatore monocomando bidet EnergySave CHRONOS_CR002565

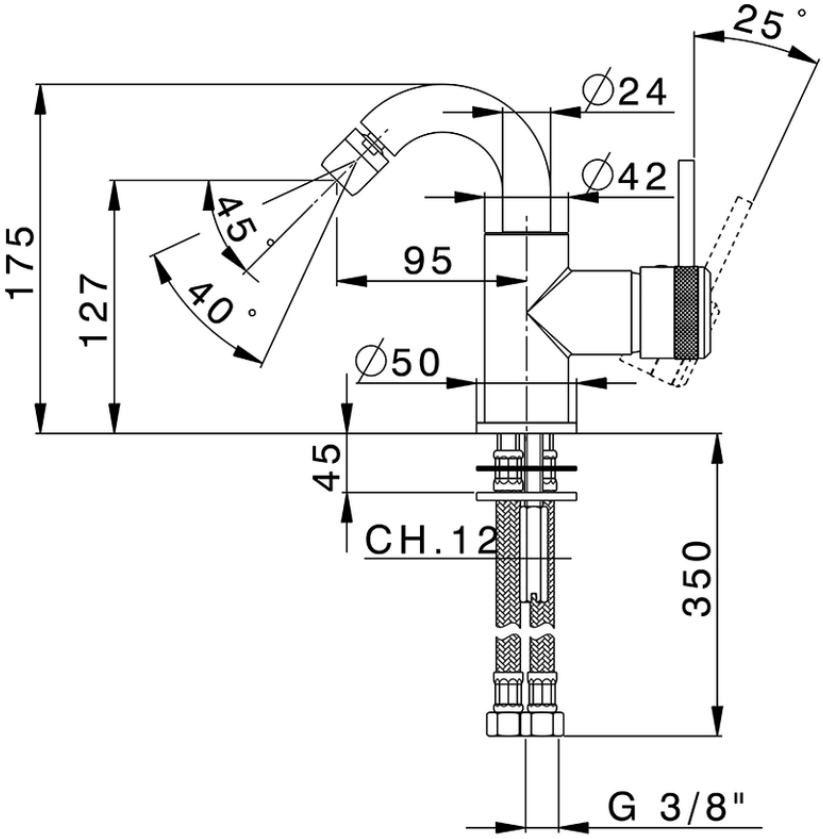

CR002565 https://www.huberitalia.com/miscelatore-monocomando-bidet-energysave-chronos-cr002565

2026-06-27