Miscelatore monocomando bidet EnergySave CHRONOS_CR002555

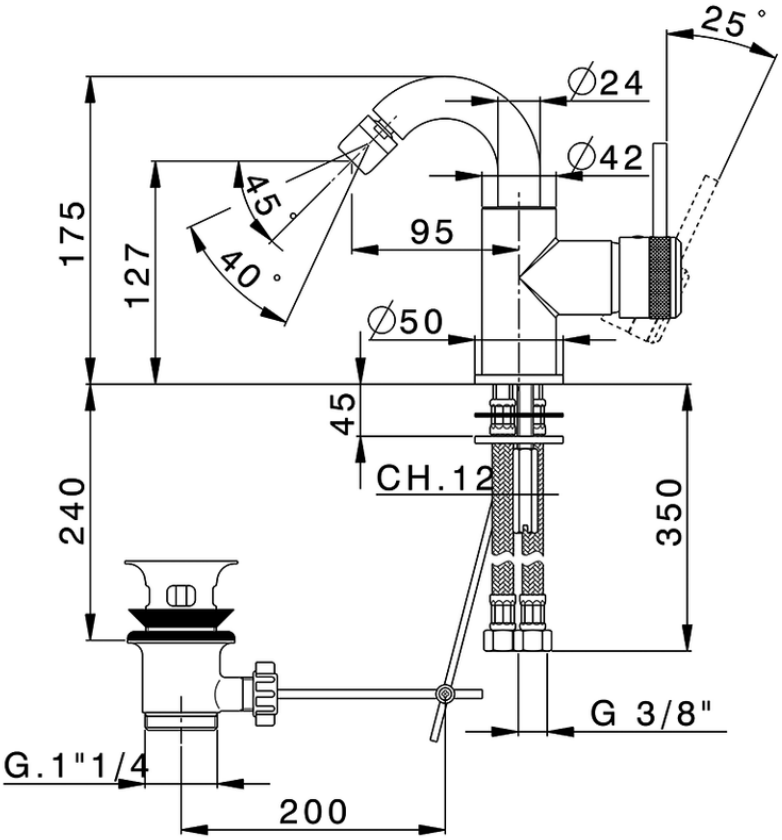

CR002555 https://www.huberitalia.com/miscelatore-monocomando-bidet-energysave-chronos-cr002555

2026-07-01