Miscelatore termostatico vasca KIRUNA

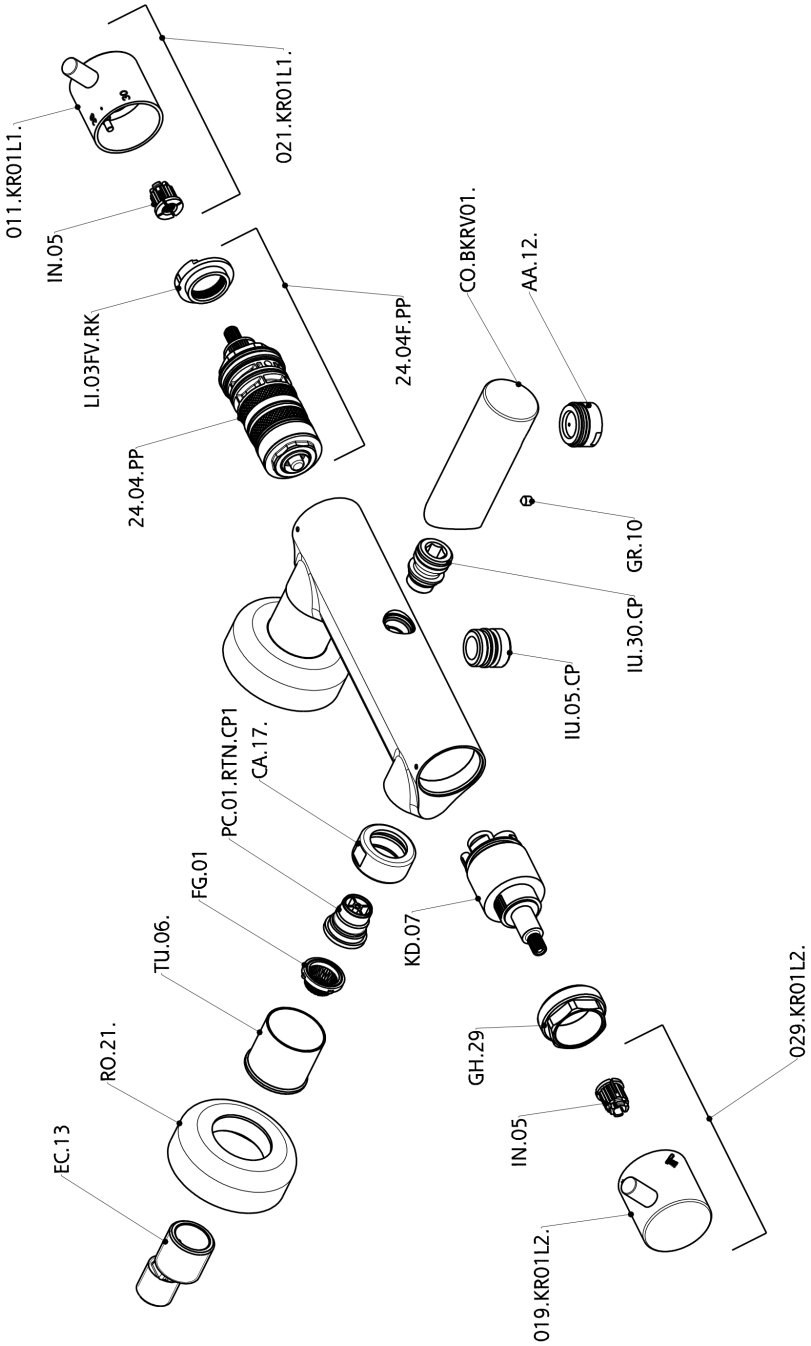

KRT23010

https://www.huberitalia.com/miscelatore-termostatico-vasca-kirunakrt23010

2024-05-06