Porta sapone_ACCESSORI BAGNO_SI090602

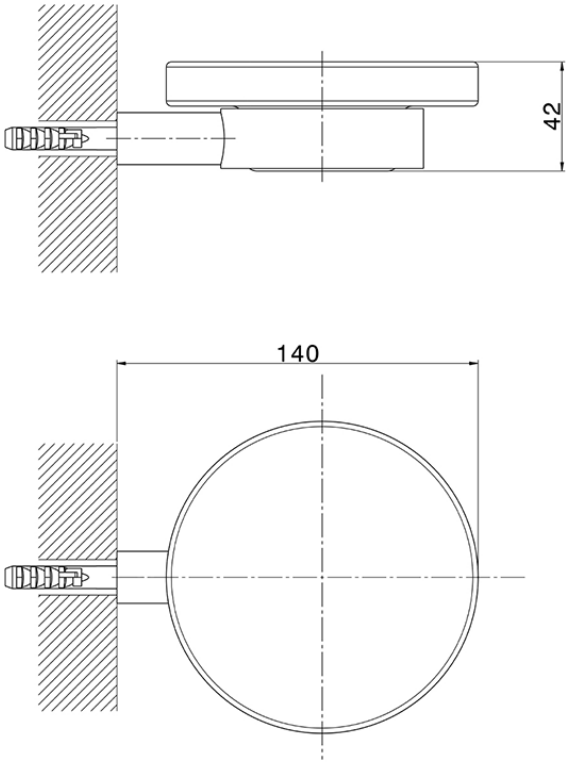

SI090602

https://www.huberitalia.com/porta-sapone-accessori-bagno-si090602

2026-10-12