Miscelatore lavabo 3 fori EVA_EV001011

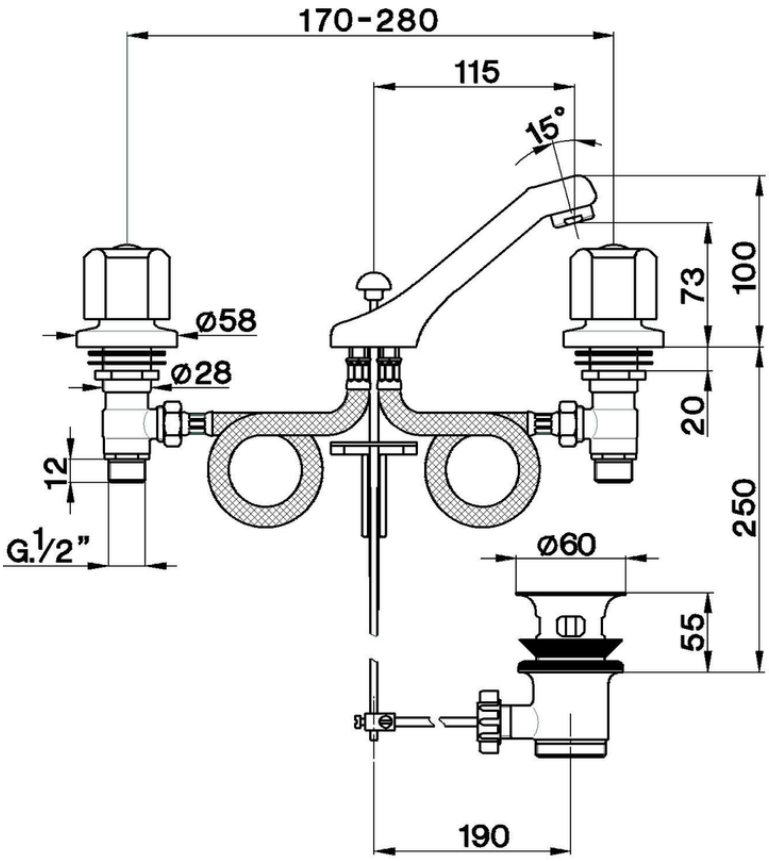

EV001011

https://www.huberitalia.com/miscelatore-lavabo-3-fori-eva-ev001011

2026-04-17