Miscelatore monocomando bidet HARLOCK_HK000554

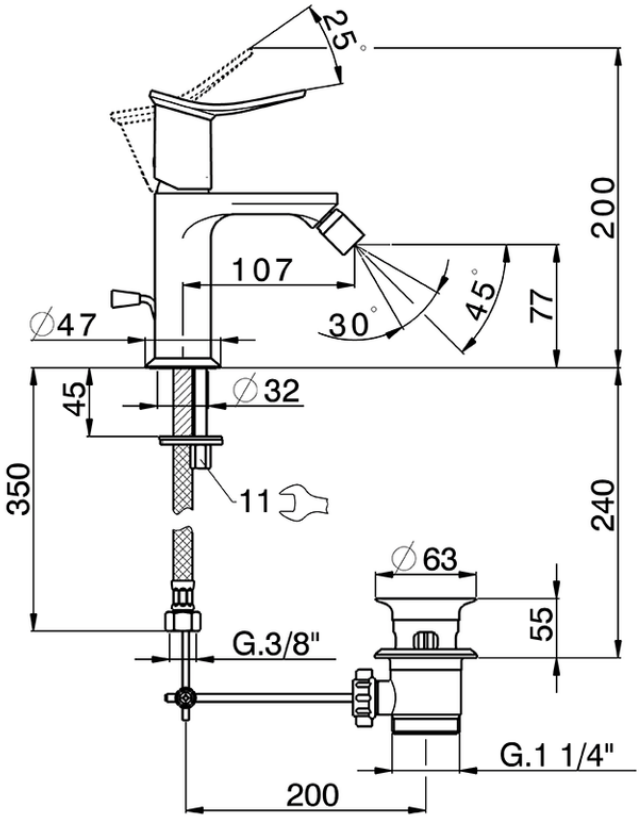

HK000554

https://www.huberitalia.com/miscelatore-monocomando-bidet-harlock-hk000554

2026-09-25

© 2021 Huber. Via Brughiere, 50. 28017 - San Maurizio (NO) - Italy
Mail: huber@hubertitalia.com, Telefono: (+39) 0322 967783, P.Iva IT02422800033.