Miscelatore monocomando lavabo ZARA_ZR000514

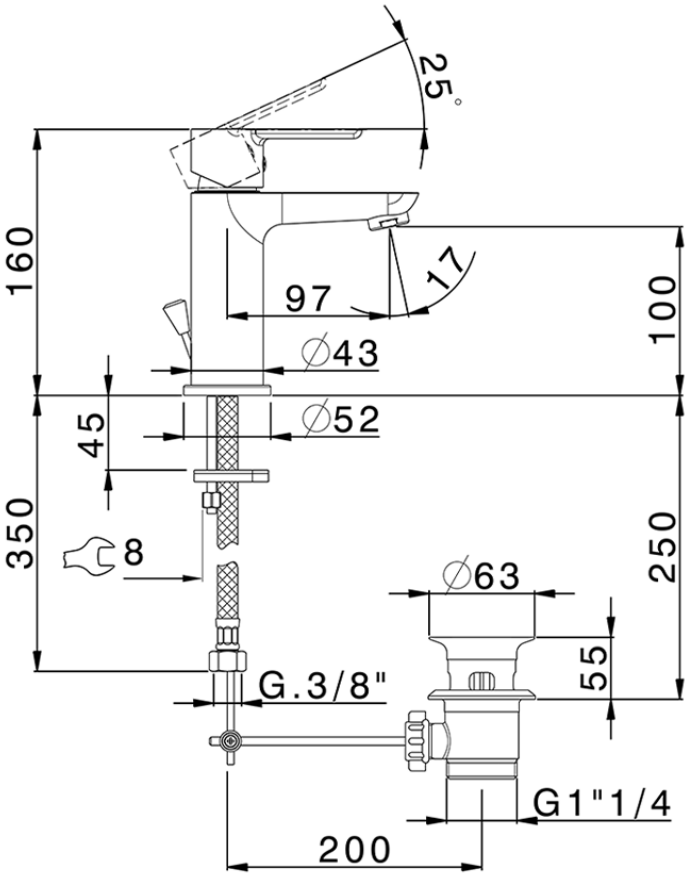

ZR000514

https://www.huberitalia.com/miscelatore-monocomando-lavabo-zara-zr000514

2026-06-05