Completo miscelatore termostatico vasca incasso VICTORIAN_914.VT01H.

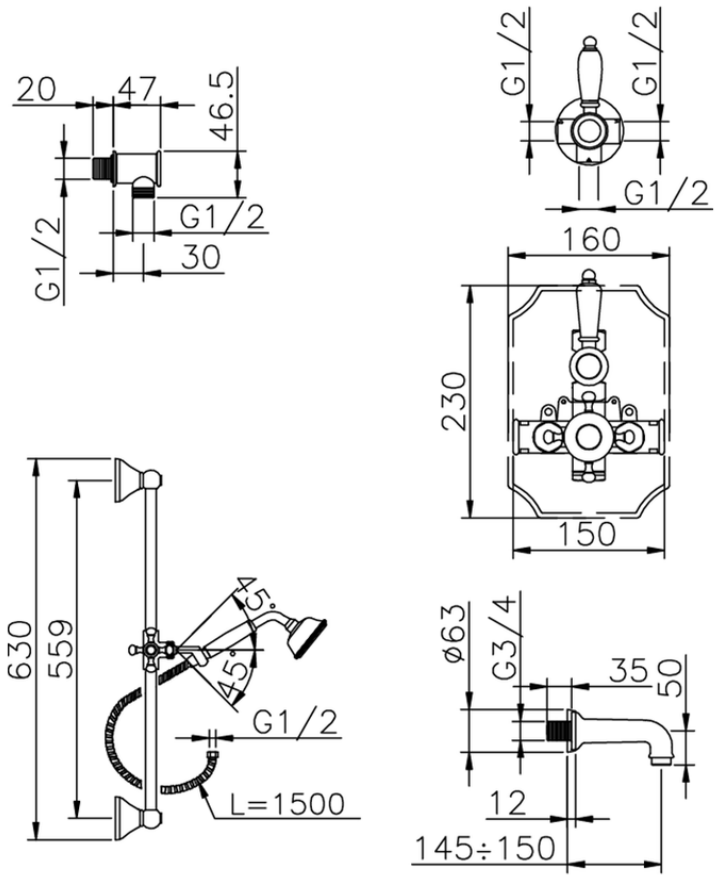

914.VT01H. https://www.huberitalia.com/completo-miscelatore-termostatico-vasca-incasso-victorian-914-vt01h

2026-09-01