Miscelatore termostatico lavello CLINIC&TECHNICAL_CLT65010

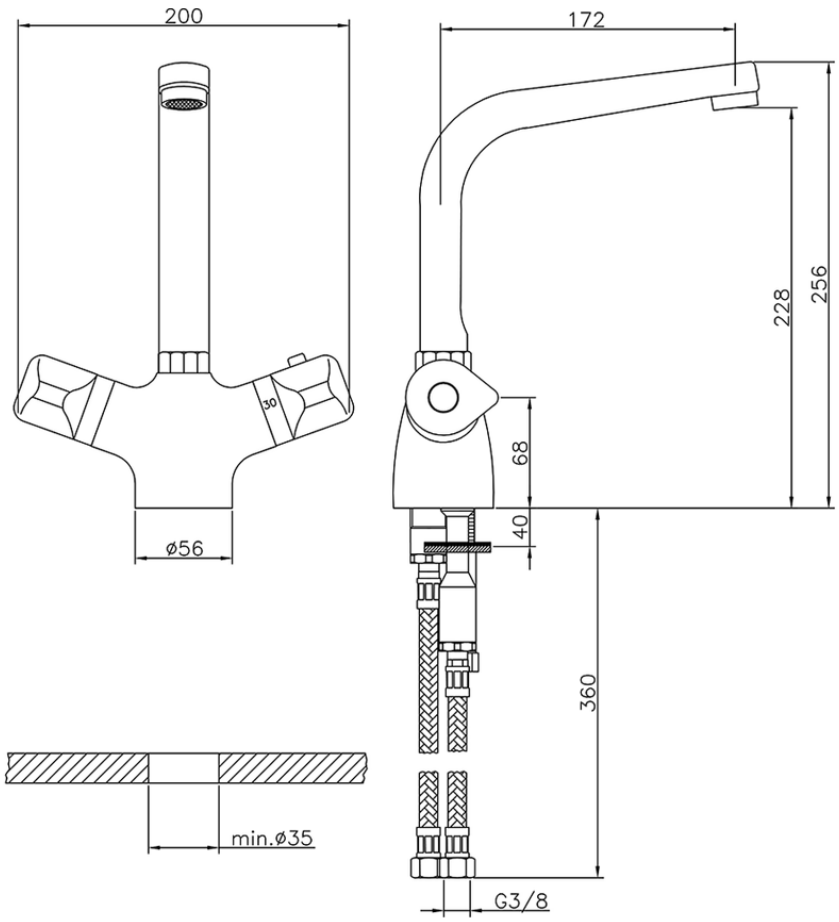

CLT65010 https://www.huberitalia.com/miscelatore-termostatico-lavello-clinictechnical-clt65010

2026-11-25

© 2021 Huber. Via Brughiere, 50. 28017 - San Maurizio (NO) - Italy
Mail: huber@hubertitalia.com, Telefono: (+39) 0322 967783, P.Iva IT02422800033.